YANMAR

PARTS CATALOG

0CR10-M82200EN

Last update Aug., 2013

Introduction

1. This parts catalog is a first edition of the 8LV320,8LV350,8LV370,8LV320Z, 8LV350Z,8LV370Z Diesel engine.

	Parts catalog No.	Date of issue	Remarks
First edition	0CR10-G82200	Mar.,2011	

2. This parts catalog does not contain the technical data needed for maintenance service.

3. The illustrations used in this parts catalog have been simplified for clarity.

4. The contents of this parts catalog are subject to change without notice.

5. Be sure to use only Yanmar genuine part for repairs.If imitation parts are used, it may cause engine defects.

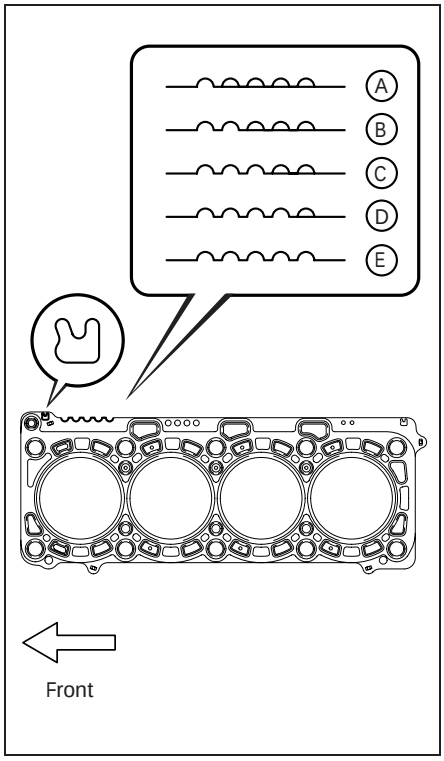

Select a new cylinder head gasket.
HINT:
Cylinder head gaskets are marked A, B, C, D or E accordingly.

New installed cylinder head gasket thickness

Item	Cutout	Specified Condition (*)
A	1	1.20 to 1.30 mm (0.0472 to 0.0512 in.)
B	2	1.25 to 1.35 mm (0.0492 to 0.0394 in.)
C	3	1.30 to 1.40 mm (0.0512 to 0.0551 in.)
D	4	1.35 to 1.45 mm (0.0531 to 0.0571 in.)
E	5	1.40 to 1.50 mm (0.0551 to 0.0591 in.)

HINT:
*: The specified condition indicates the gasket's thickness after tightening the cylinder head.

Select the largest piston protrusion value from the measurements and then select a new appropriate gasket according to the table below.

Piston protrusion

Item	Specified Condition (**)
A	0.520 to 0.575 mm (0.02047 to 0.02264 in.)
B	0.575 to 0.625 mm (0.02264 to 0.02461 in.)
C	0.625 to 0.675 mm (0.02461 to 0.02657 in.)
D	0.675 to 0.725 mm (0.02657 to 0.02854 in.)
E	0.725 to 0.780 mm (0.02854 to 0.03071 in.)

HINT:
**: Refer to the service manual for the measuring procedure of the piston protrusion.

– CYLINDER HEAD GASKET (for the Left Head)

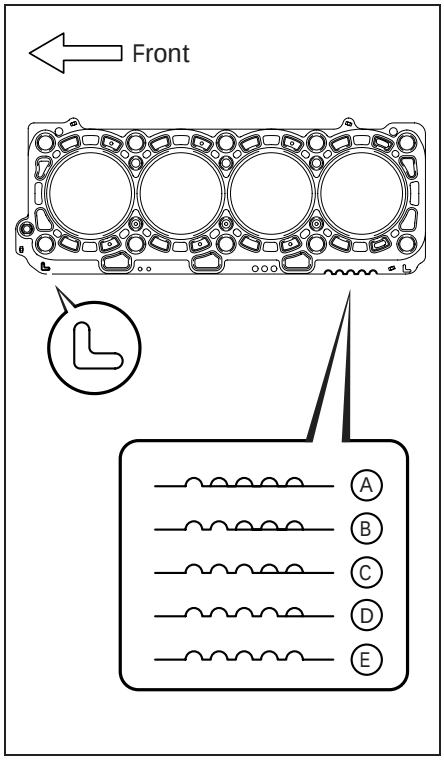

Select a new cylinder head gasket.
HINT:
Cylinder head gaskets are marked A, B, C, D or E accordingly.

New installed cylinder head gasket thickness

Item	Cutout	Specified Condition (*)
A	1	1.20 to 1.30 mm (0.0472 to 0.0512 in.)
B	2	1.25 to 1.35 mm (0.0492 to 0.0394 in.)
C	3	1.30 to 1.40 mm (0.0512 to 0.0551 in.)
D	4	1.35 to 1.45 mm (0.0531 to 0.0571 in.)
E	5	1.40 to 1.50 mm (0.0551 to 0.0591 in.)

HINT:
*: The specified condition indicates the gasket's thickness after tightening the cylinder head.

Select the largest piston protrusion value from the measurements and then select a new appropriate gasket according to the table.

Piston protrusion

Item	Specified Condition (**)
A	0.520 to 0.575 mm (0.02047 to 0.02264 in.)
B	0.575 to 0.625 mm (0.02264 to 0.02461 in.)
C	0.625 to 0.675 mm (0.02461 to 0.02657 in.)
D	0.675 to 0.725 mm (0.02657 to 0.02854 in.)
E	0.725 to 0.780 mm (0.02854 to 0.03071 in.)

HINT:
**: Refer to the service manual for the measuring procedure of the piston protrusion.

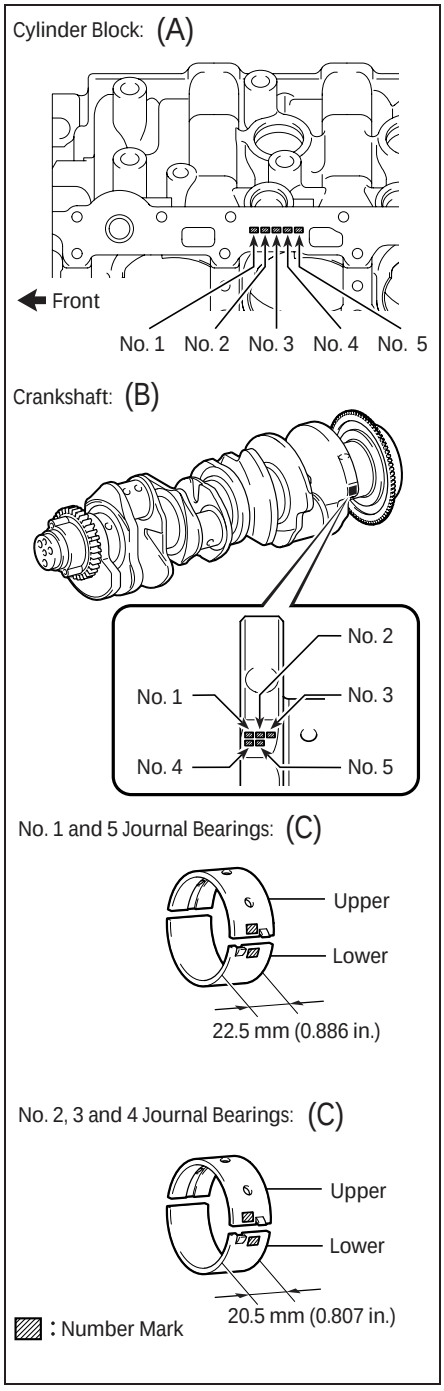

If replacing a bearing, replace it with one that has the same number. If the number of the bearing cannot be determined, select the correct bearing by adding together the numbers imprinted on the cylinder block and crankshaft, then refer to the appropriate bearing number. There are 7 sizes of standard bearings, marked "1", "2", "3", "4", "5", "6" and "7" accordingly.

EXAMPLE

Cylinder block main journal bore diameter "1" (A) + Crankshaft main journal diameter "2" (B) = Total number 3 (use bearing "3" (C))

No. 1 to No. 5 on cylinder block

Cylinder Block (A)	Crankshaft (B)	Use Bearing (C)
"1"	"0"	"1"
	"1"	"2"
	"2"	"3"
	"3"	"4"
	"4"	"5"
"2"	"0"	"2"
	"1"	"3"
	"2"	"4"
	"3"	"5"
	"4"	"6"
"3"	"0"	"3"
	"1"	"4"
	"2"	"5"
	"3"	"6"
	"4"	"7"

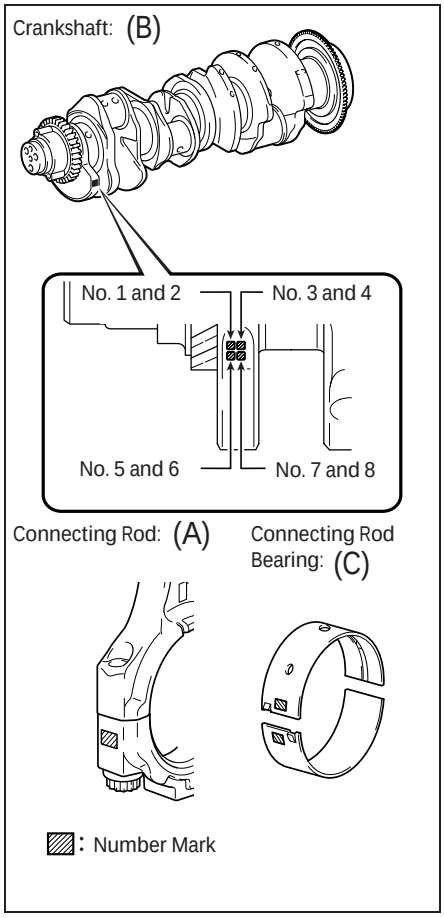

If replacing a bearing, replace it with one that has the same number marked on the connecting rod. There are 5 sizes of standard bearings, marked "1", "2", "3", "4"and "5" accordingly.
Select the correct bearing by adding together the number marks imprinted on the connecting rod and crankshaft.
EXAMPLE
Connecting rod inside diameter "1" (A) + Crank pin diameter "2" (B) = Total number 3 (use bearing "3" (C))

Connectiog Rod (A)	Crankshaft (B)	Use Bearing (C)
"1"	"0"	"1"
	"1"	"2"
	"2"	"3"
"2"	"0"	"2"
	"1"	"3"
	"2"	"4"
"3"	"0"	"3"
	"1"	"4"
	"2"	"5"

Contents

Fig. No.	Fig. Name
8LV320(Z)/8LV350(Z)/8LV370(Z)	
1.	CYLINDER BLOCK
2.	GEAR HOUSING
3.	GEAR HOUSING COVER & RETAINER
4.	FLYWHEEL HOUSING
5.	MOUNTING FOOT
6.	LUB.OIL SUMP
7.	LABEL
8.	BREATHER HOSE
9.	SEPARATOR
10.	TURBOCHARGER
11.	INTAKE SILENCER
12.	EXHAUST BEND & MIXING ELBOW(8LV320,350,370)
13.	EXHAUST BEND & MIXING ELBOW(8LV320Z,350Z,370Z)
14.	AIR COOLER
15.	AIR DUCT
16.	EXHAUST MANIFOLD
17.	SUCTION MANIFOLD
18.	CYLINDER HEAD
19.	CYLINDER HEAD COVER
20.	ENGINE LIFTER
21.	TOP COVER
22.	CAMSHAFT
23.	CRANKSHAFT & PISTON
24.	LUB.OIL COOLER

Fig. No.	Fig. Name
25.	LUB.OIL COOLER COVER
26.	LUB.OIL DIPSTICK
27.	LUB.OIL STRAINER
28.	LUB.OIL PIPE(FILTER)
29.	LUB.OIL PIPE(TURBOCHARGER)
30.	OIL SUCTION/DRAIN PUMP(OPTIONAL)
31.	BILGE PUMP(OPTIONAL)
32.	COOLING SEA WATER PUMP
33.	COOLING FRESH WATER PUMP
34.	THERMOSTAT
35.	COOLING FRESH WATER COOLER
36.	COOLING SEA WATER PIPE(8LV320,
37.	COOLING SEA WATER PIPE(8LV320Z,350Z,370Z)
38.	COOLING SEA WATER PIPE(DRIVE)
39.	COOLING SEA WATER PIPE(MIXING/BY-PASS)
40.	COOLING FRESH WATER PIPE
41.	COOLING FRESH WATER PIPE(BY-PASS)
42.	HOT WATER SYSTEM
43.	KINGSTON COCK(OPTIONAL)
44.	FUEL INJECTION PUMP & FUEL INJECTION PIPE
45.	FUEL INJECTION VALVE
46.	FUEL PIPE
47.	FUEL STRAINER
48.	FUEL COOLER
49.	OIL/WATER SEPARATOR(OPTIONAL)

Contents

Fig. No.	Fig. Name
50.	GLOW PLUG
51.	POWER STEERING PUMP
52.	POWER STEERING COOLER & TANK
53.	POWER STEERING PIPE
71.	(53A)POWER STEERING PIPE(FROM 2012/09)(OPTIONAL)
54.	CLUTCH
55.	P.T.O.FLANGE(OPTIONAL)
56.	TROLLING VALVE(A2/OPTIONAL)
57.	ELECTRONIC TROLLING(TYPE-E/OPTIONAL)
58.	ELECTRONIC TROLLING(TYPE-C/OPTIONAL)
59.	CLUTCH ADAPTER
60.	DRIVE ADAPTER
61.	STARTING MOTOR
62.	GENERATOR
63.	BELT COVER
64.	ENGINE CONTROL UNIT
65.	ELECTRONIC DRIVE UNIT
66.	WIRE HARNESS
67.	SENSOR
68.	RELAY & FUSE
69.	BATTERY TERMINAL
70.	TOOL

Fig. No.	Fig. Name

Fig.1. CYLINDER BLOCK

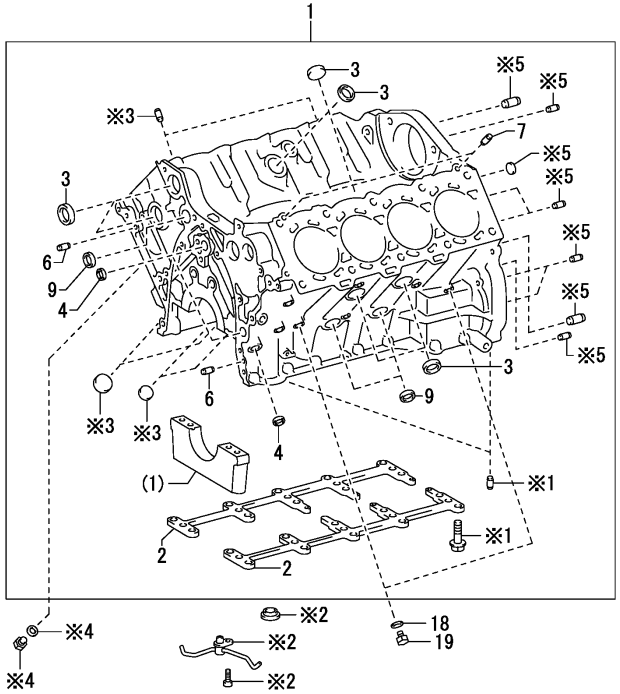

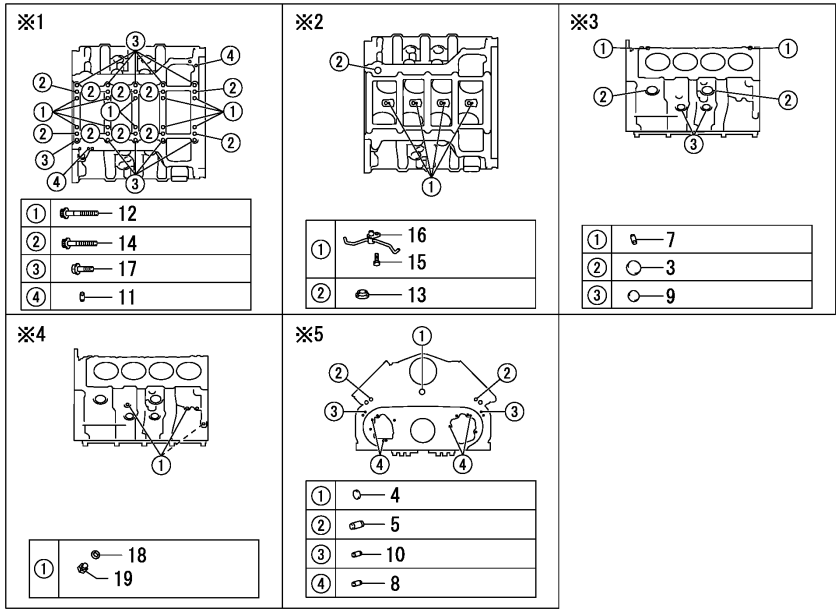

(A)=8LV320 (D)=8LV320Z
(B)=8LV350 (E)=8LV350Z
(C)=8LV370 (F)=8LV370Z

No.	Lev.	Parts No.	Description	Q'ty (A)	(B)	(C)	(D)	(E)	(F)	I	R
1	1	119798-01010	BLOCK ASSY, CYLINDER	1	1	1	1	1	1		
2	2	119798-01020	PLATE	2	2	2	2	2	2		
3	2	119798-01030	PLUG	8	8	8	8	8	8		
4	2	119798-01040	PLUG	4	4	4	4	4	4		
5	2	119798-01050	PIN, STRAIGHT L22D10	2	2	2	2	2	2		
6	2	119798-01060	PIN, STRAIGHT L15 D8	2	2	2	2	2	2		
7	2	119798-01060	PIN, STRAIGHT L15 D8	4	4	4	4	4	4		
8	2	119798-01080	PIN, STRAIGHT L12 D4	4	4	4	4	4	4		
9	2	119771-90030	PLUG	5	5	5	5	5	5		
10	2	119771-90050	PIN	2	2	2	2	2	2		
11	2	119771-90050	PIN	2	2	2	2	2	2		
12	1	119798-01070	BOLT, M11X106	10	10	10	10	10	10		
13	1	119798-01090	GASKET	1	1	1	1	1	1		
14	1	119798-01100	BOLT, M10X90.5	10	10	10	10	10	10		
15	1	119798-01110	BOLT	4	4	4	4	4	4		
16	1	119798-01120	NOZZLE	4	4	4	4	4	4		
17	1	119798-01400	BOLT	10	10	10	10	10	10		
18	1	119770-90720	GASKET	4	4	4	4	4	4		
19	1	119770-90790	PLUG	4	4	4	4	4	4		

N:Old $\xleftrightarrow[\text{No}]{\text{Yes}}$ New, Q:Old $\xleftrightarrow[\text{Yes}]{\text{No}}$ New, R:Old $\xleftrightarrow[\text{Yes}]{\text{Yes}}$ New, S:Old $\xleftrightarrow[\text{No}]{\text{No}}$ New, W:Add, Z:Discontinued, F:Interchangeable by set, K:Q'ty Change

Copyright (C) YANMAR CO., LTD. All RightsReserved.

Fig.2. GEAR HOUSING

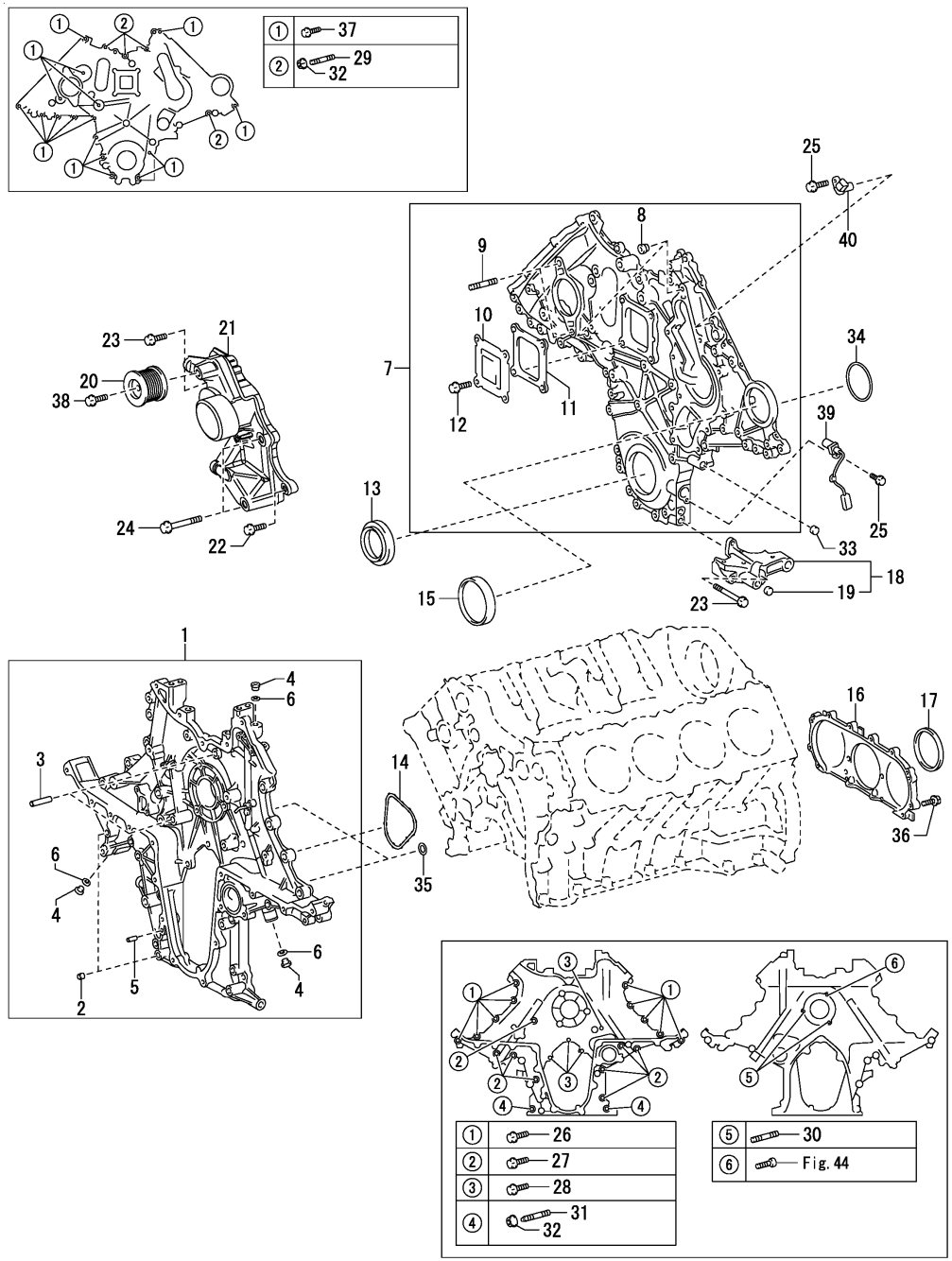

(A)=8LV320 (B)=8LV350 (C)=8LV370 (D)=8LV320Z (E)=8LV350Z (F)=8LV370Z

No.	Lev.	Parts No.	Description	Q'ty (A)	(B)	(C)	(D)	(E)	(F)	I	R
1	1	119798-01130	CASE ASSY, GEAR	1	1	1	1	1	1		
2	2	119798-01810	PIN, 11XL10	2	2	2	2	2	2		
3	2	119798-01820	PIN, STRAIGHT D10X36	2	2	2	2	2	2		
4	2	119798-01830	PLUG, M18X1.5XL13	3	3	3	3	3	3		
5	2	119770-90180	PIN	1	1	1	1	1	1		
6	2	119770-90680	GASKET	3	3	3	3	3	3		
7	1	119798-01160	COVER ASSY	1	1	1	1	1	1		
8	2	119798-01180	PLUG	2	2	2	2	2	2		
9	2	119798-01190	STUD	2	2	2	2	2	2		
10	2	119798-01210	PLATE	1	1	1	1	1	1		
11	2	119798-01220	GASKET	1	1	1	1	1	1		
12	2	119798-01710	BOLT, FLANGE M6X12	4	4	4	4	4	4		
13	1	119798-01170	SEAL, OIL	1	1	1	1	1	1		
14	1	119798-01200	GASKET	1	1	1	1	1	1		
15	1	119798-01230	PLUG	1	1	1	1	1	1		
16	1	119798-01240	RETAINER, OIL SEAL	1	1	1	1	1	1		
17	1	119798-01250	SEAL, OIL	1	1	1	1	1	1		
18	1	119798-01260	BRACKET	1	1	1	1	1	1		
19	2	119798-01810	PIN, 11XL10	1	1	1	1	1	1		
20	1	119798-01270	PULLEY	1	1	1	1	1	1		
21	1	119798-01280	TENSIONER	1	1	1	1	1	1		
22	1	119798-01290	BOLT, FLANGE M8X40	1	1	1	1	1	1		
23	1	119798-01700	BOLT, FLANGE M8X80	2	2	2	2	2	2		
24	1	119798-01720	BOLT, FLANGE M10X95	2	2	2	2	2	2		
25	1	119798-01730	BOLT, FLANGE M6X16	2	2	2	2	2	2		
26	1	119798-01740	BOLT, FLANGE M10X40	10	10	10	10	10	10		
27	1	119798-01750	BOLT, FLANGE M8X45	8	8	8	8	8	8		
28	1	119798-01760	BOLT, FLANGE M8X20	4	4	4	4	4	4		
29	1	119798-01770	STUD, 8X42	4	4	4	4	4	4		
30	1	119798-01780	STUD	2	2	2	2	2	2		
31	1	119798-01790	STUD, 8X47.5	2	2	2	2	2	2		
32	1	119798-01800	NUT, M8	6	6	6	6	6	6		
33	1	119798-01810	PIN, 11XL10	3	3	3	3	3	3		
34	1	119798-01840	O-RING	1	1	1	1	1	1		
35	1	119798-01850	O-RING	2	2	2	2	2	2		
36	1	119798-11310	BOLT, M6X20	10	10	10	10	10	10		
37	1	119798-14170	BOLT, M8X30	16	16	16	16	16	16		
38	1	119798-21090	BOLT, M10X50	1	1	1	1	1	1		
39	1	119798-91650	SENSOR	1	1	1	1	1	1		
40	1	119798-91660	SENSOR	1	1	1	1	1	1		

N:Old $\overset{\text{Yes}}{\underset{\text{No}}{\leftrightarrow}}$ New, Q:Old $\overset{\text{No}}{\underset{\text{Yes}}{\leftrightarrow}}$ New, R:Old $\overset{\text{Yes}}{\underset{\text{Yes}}{\leftrightarrow}}$ New, S:Old $\overset{\text{No}}{\underset{\text{No}}{\leftrightarrow}}$ New, W:Add, Z:Discontinued, F:Interchangeable by set, K:Q'ty Change

Copyright (C) YANMAR CO., LTD. All RightsReserved.

Fig.3. GEAR HOUSING COVER & RETAINER

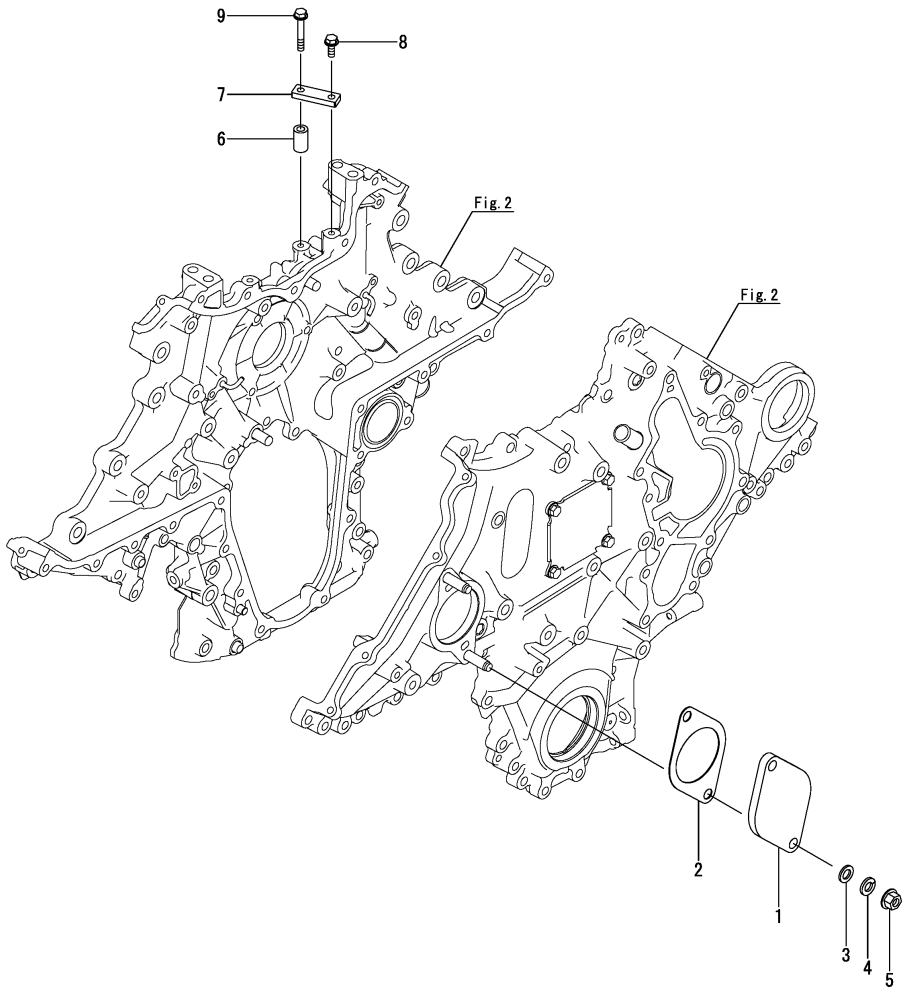

(A)=8LV320 (D)=8LV320Z
(B)=8LV350 (E)=8LV350Z
(C)=8LV370 (F)=8LV370Z

No.	Lev.	Parts No.	Description	Q'ty (A)	(B)	(C)	(D)	(E)	(F)	I	R
1	1	119798-01580	COVER	1	1	1	1	1	1		1
2	1	119798-01590	GASKET	1	1	1	1	1	1		1
3	1	22117-100000	WASHER, 10	2	2	2	2	2	2		1
4	1	22217-100000	WASHER, SPRING 10	2	2	2	2	2	2		1
5	1	26376-100002	NUT, M10	2	2	2	2	2	2		1
6	1	119798-01980	SPACER	1	1	1	1	1	1		
7	1	119798-01990	PLATE	1	1	1	1	1	1		
8	1	26106-060162	BOLT, M6X 16 PLATED	1	1	1	1	1	1		
9	1	26106-060402	BOLT, M6X 40 PLATED	1	1	1	1	1	1		

Remarks
(1)8LV320Z,350Z,370Z is optional.
(Non power steering spec.)

N:Old $\frac{\text{Yes}}{\text{No}}$ New, Q:Old $\frac{\text{No}}{\text{Yes}}$ New, R:Old $\frac{\text{Yes}}{\text{Yes}}$ New, S:Old $\frac{\text{No}}{\text{No}}$ New, W:Add, Z:Discontinued, F:Interchangeable by set, K:Q'ty Change

Copyright (C) YANMAR CO., LTD. All RightsReserved.

Fig.4. FLYWHEEL HOUSING

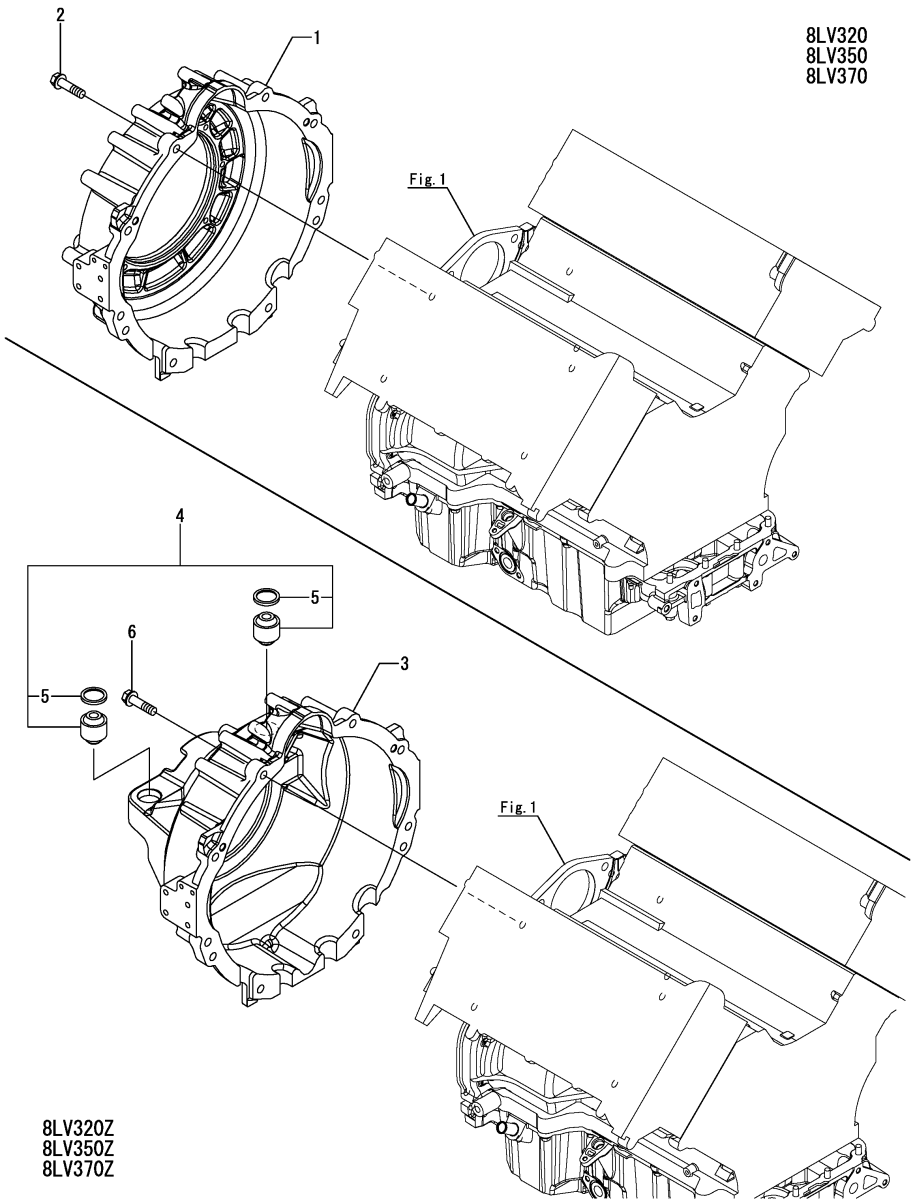

(A)=8LV320 (D)=8LV320Z
(B)=8LV350 (E)=8LV350Z
(C)=8LV370 (F)=8LV370Z

No.	Lev.	Parts No.	Description	Q'ty (A)	(B)	(C)	(D)	(E)	(F)	I	R
1	1	119798-01600	HOUSING, FLYWHEEL	1	1	1					
2	1	26136-120452	BOLT, M12X 45 PLATED	10	10	10					
3	1	119799-01610	HOUSING, FLYWHEEL				1	1	1		
4	1	119778-08200	MOUNT ASSY,RUBBER				1	1	1	W	1
			(D=EXXXXX)		(E=EXXXXX)			(F=EXXXXX)			
5	2	119778-08350	SPACER				2	2	2		
6	1	26136-120452	BOLT, M12X 45 PLATED				10	10	10		

Remarks
(1)This part is only sold as a set.
For each order, 2 parts will be shipped.

N:Old $\xleftrightarrow[\text{No}]{\text{Yes}}$ New, Q:Old $\xleftrightarrow[\text{Yes}]{\text{No}}$ New, R:Old $\xleftrightarrow[\text{Yes}]{\text{Yes}}$ New, S:Old $\xleftrightarrow[\text{No}]{\text{No}}$ New, W:Add, Z:Discontinued, F:Interchangeable by set, K:Q'ty Change

Copyright (C) YANMAR CO., LTD. All RightsReserved.

Fig.5. MOUNTING FOOT

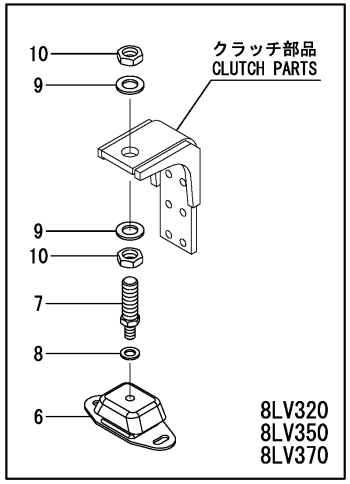

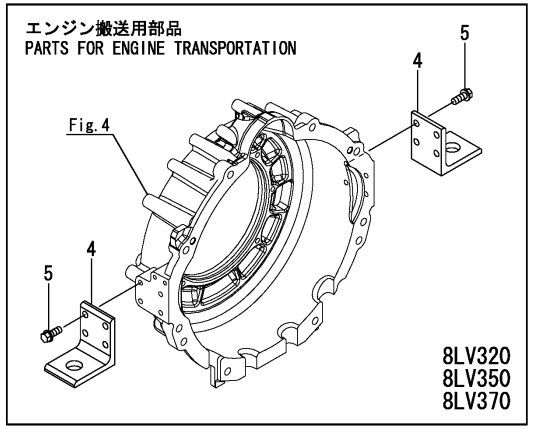

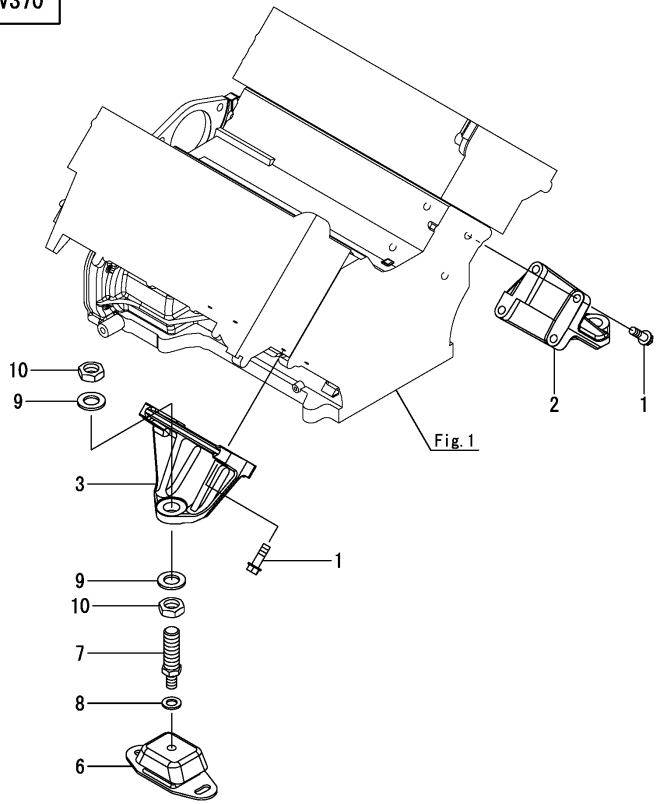

(A)=8LV320 (B)=8LV350 (C)=8LV370 (D)=8LV320Z (E)=8LV350Z (F)=8LV370Z

No.	Lev.	Parts No.	Description	Q'ty (A)	(B)	(C)	(D)	(E)	(F)	I	R
1	1	119775-08230	BOLT	8	8	8	8	8	8		
2	1	119798-08530	FOOT, ENGINE	1	1	1	1	1	1		
3	1	119798-08620	FOOT, ENGINE	1	1	1	1	1	1		
4	1	119798-08220	FOOT, ENGINE	2	2	2					
5	1	26106-100252	BOLT, M10X 25 PLATED	8	8	8					
6	1	119798-08310	RUBBER, MOUNT	4	4	4	2	2	2		
7	1	119798-08320	BOLT	4	4	4	2	2	2		
8	1	22137-160000	WASHER, 16	4	4	4	2	2	2		
9	1	22137-240000	WASHER, 24	8	8	8	4	4	4		
10	1	26776-240002	NUT, LOCK M24	8	8	8	4	4	4		

N:Old $\xleftrightarrow[\text{No}]{\text{Yes}}$ New, Q:Old $\xleftrightarrow[\text{Yes}]{\text{No}}$ New, R:Old $\xleftrightarrow[\text{Yes}]{\text{Yes}}$ New, S:Old $\xleftrightarrow[\text{No}]{\text{No}}$ New, W:Add, Z:Discontinued, F:Interchangeable by set, K:Q'ty Change

Copyright (C) YANMAR CO., LTD. All RightsReserved.

Fig.6. LUB.OIL SUMP

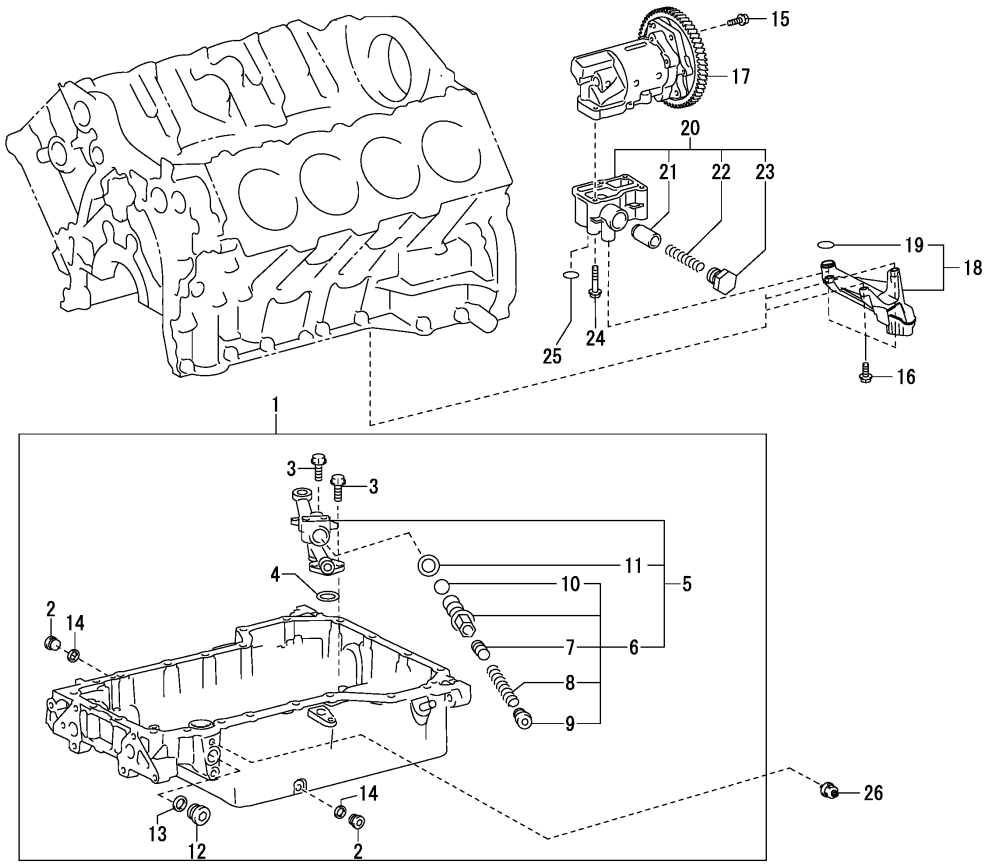

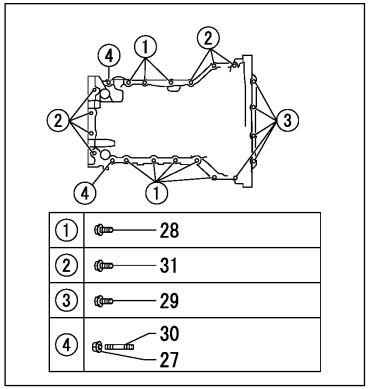

(A)=8LV320 (B)=8LV350 (C)=8LV370 (D)=8LV320Z (E)=8LV350Z (F)=8LV370Z

No.	Lev.	Parts No.	Description	Q'ty (A)	(B)	(C)	(D)	(E)	(F)	I	R
1	1	119798-01410	SUMP ASSY, OIL	1	1	1	1	1	1		
2	2	119798-01420	PLUG	2	2	2	2	2	2		
3	2	119798-11310	BOLT, M6X20	4	4	4	4	4	4		
4	2	119798-32150	O-RING	1	1	1	1	1	1		
5	2	119798-32160	PIPE	1	1	1	1	1	1		
6	3	119798-32120	REGULATOR, OIL	1	1	1	1	1	1		
7	4	119798-32040	VALVE, RELIEF	1	1	1	1	1	1		
8	4	119798-32060	SPRING, VALVE	1	1	1	1	1	1		
9	4	119798-32080	PLUG	1	1	1	1	1	1		
10	4	119798-32100	GASKET, VALVE	1	1	1	1	1	1		
11	3	119798-32130	GASKET	1	1	1	1	1	1		
12	2	119798-33020	PLUG	1	1	1	1	1	1		
13	2	119770-90690	GASKET	1	1	1	1	1	1		
14	2	119770-90720	GASKET	2	2	2	2	2	2		
15	1	119798-01730	BOLT, FLANGE M6X16	4	4	4	4	4	4		
16	1	119798-11310	BOLT, M6X20	3	3	3	3	3	3		
17	1	119798-32010	PUMP ASSY, OIL	1	1	1	1	1	1		
18	1	119798-32020	STRAINER, OIL	1	1	1	1	1	1		
19	2	119798-32030	O-RING	1	1	1	1	1	1		
20	1	119798-32110	REGULATOR ASSY, OIL	1	1	1	1	1	1		
21	2	119798-32050	VALVE, RELIEF	1	1	1	1	1	1		
22	2	119798-32070	SPRING, VALVE	1	1	1	1	1	1		
23	2	119798-32090	PLUG	1	1	1	1	1	1		
24	1	119798-32140	BOLT, M6X50	4	4	4	4	4	4		
25	1	119798-32170	O-RING	1	1	1	1	1	1		
26	1	119798-91600	GAUGE	1	1	1	1	1	1		
27	1	119798-01800	NUT, M8	2	2	2	2	2	2		
28	1	119798-14160	BOLT, M8X20	8	8	8	8	8	8		
29	1	119798-14170	BOLT, M8X30	5	5	5	5	5	5		
30	1	119798-33060	STUD	2	2	2	2	2	2		
31	1	119798-49720	BOLT, FLANGE M8X70	7	7	7	7	7	7		

N:Old $\frac{\text{Yes}}{\text{No}}$ New, Q:Old $\frac{\text{No}}{\text{Yes}}$ New, R:Old $\frac{\text{Yes}}{\text{Yes}}$ New, S:Old $\frac{\text{No}}{\text{No}}$ New, W:Add, Z:Discontinued, F:Interchangeable by set, K:Q'ty Change

Copyright (C) YANMAR CO., LTD. All RightsReserved.

Fig.7. LABEL

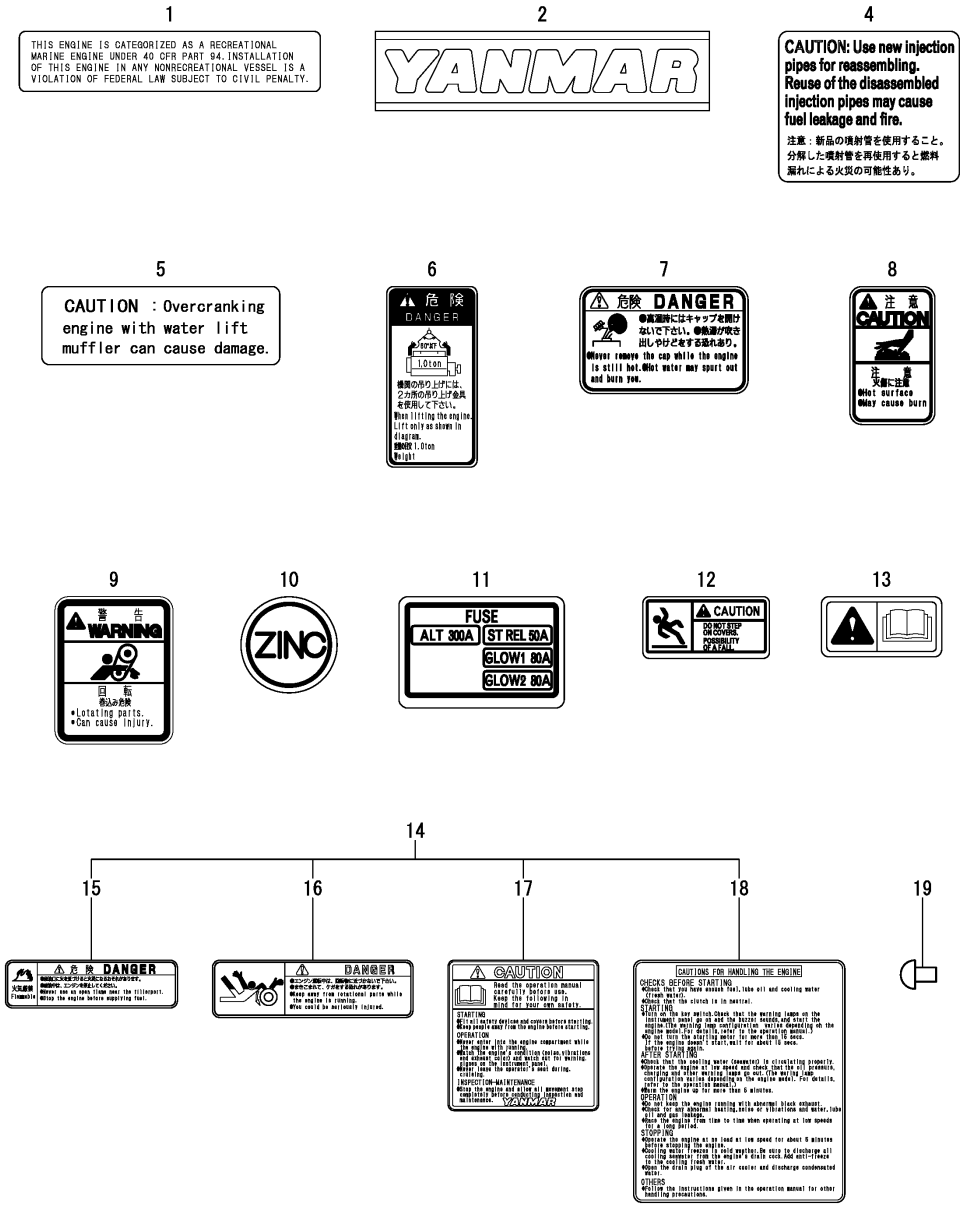

(A)=8LV320 (B)=8LV350 (C)=8LV370 (D)=8LV320Z (E)=8LV350Z (F)=8LV370Z

No.	Lev.	Parts No.	Description	Q'ty (A)	(B)	(C)	(D)	(E)	(F)	I	R
1	1	119578-07750	LABEL, RECREATIONAL	1	1	1	1	1	1		
2	1	194170-65891	LABEL, SEAT	2	2	2	2	2	2		
4	1	119798-07150	LABEL, CAUTION	1	1	1	1	1	1		
5	1	128171-07150	LABEL	1	1	1	1	1	1		
6	1	120324-07240	LABEL, DANGER	2	2	2	2	2	2		
7	1	128296-07260	LABEL, DANGER	1	1	1	1	1	1		
8	1	128296-07300	LABEL, DANGER	3	3	3	3	3	3		
9	1	128296-07350	LABEL, DANGER	1	1	1	1	1	1		
10	1	119574-07400	LABEL	1	1	1	1	1	1		
11	1	119798-07800	LABEL, FUSE	1	1	1	1	1	1		
12	1	119578-07890	LABEL, CAUTION	2	2	2	2	2	2		
13	1	196630-12980	LABEL, CAUTION	1	1	1	1	1	1		
14	1	128296-07190	LABEL,LOOSE PARTS	1	1	1	1	1	1		
15	2	128296-07400	LABEL, DANGER	2	2	2	2	2	2		
16	2	128296-07420	LABEL, DANGER	1	1	1	1	1	1		
17	2	128296-07450	LABEL, DANGER	1	1	1	1	1	1		
18	2	128296-07460	LABEL, DANGER	1	1	1	1	1	1		
19	1	102210-07990	RIVET	4	4	4	4	4	4		

N:Old $\xleftrightarrow[\text{No}]{\text{Yes}}$ New, Q:Old $\xleftrightarrow[\text{Yes}]{\text{No}}$ New, R:Old $\xleftrightarrow[\text{Yes}]{\text{Yes}}$ New, S:Old $\xleftrightarrow[\text{No}]{\text{No}}$ New, W:Add, Z:Discontinued, F:Interchangeable by set, K:Q'ty Change

Copyright (C) YANMAR CO., LTD. All RightsReserved.

Fig.8. BREATHER HOSE

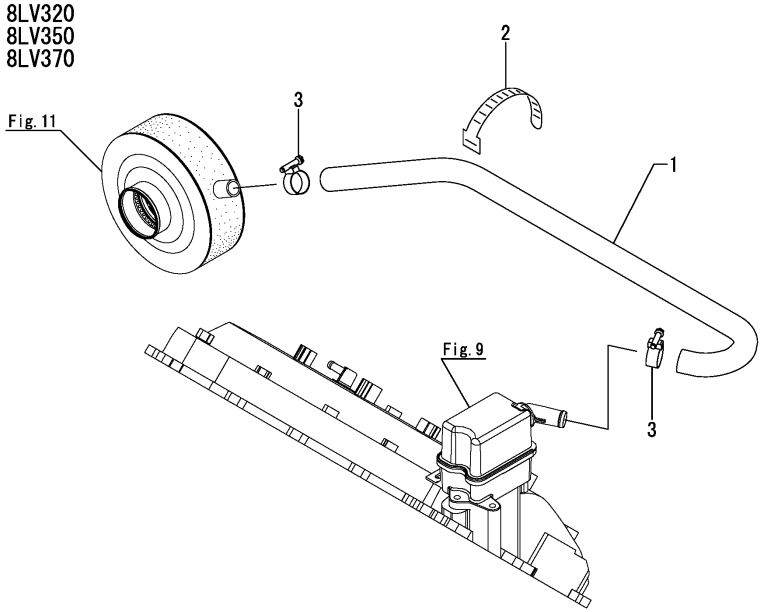

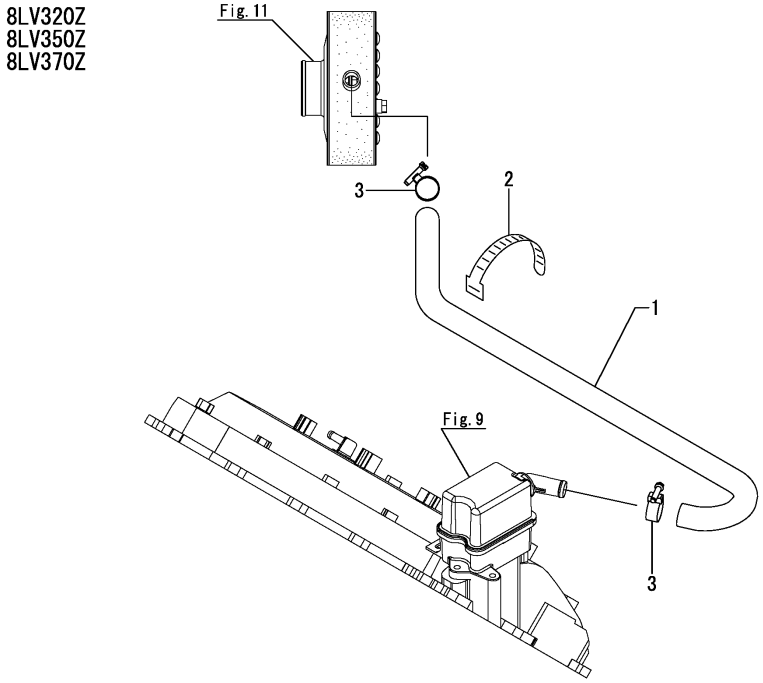

(A)=8LV320 (D)=8LV320Z
(B)=8LV350 (E)=8LV350Z
(C)=8LV370 (F)=8LV370Z

No.	Lev.	Parts No.	Description	Q'ty (A)	(B)	(C)	(D)	(E)	(F)	I	R
1	1	119798-03161	HOSE, BREATHER	1	1	1	1	1	1		
2	1	194250-51660	BAND, NYLON	1	1	1	1	1	1		
3	1	23000-025000	CLAMP, 25	2	2	2	2	2	2		

N:Old $\xleftarrow[\text{No}]{\text{Yes}}$ New, Q:Old $\xleftarrow[\text{Yes}]{\text{No}}$ New, R:Old $\xleftarrow[\text{Yes}]{\text{Yes}}$ New, S:Old $\xleftarrow[\text{No}]{\text{No}}$ New, W:Add, Z:Discontinued, F:Interchangeable by set, K:Q'ty Change

Copyright (C) YANMAR CO., LTD. All RightsReserved.

Fig.9. SEPARATOR

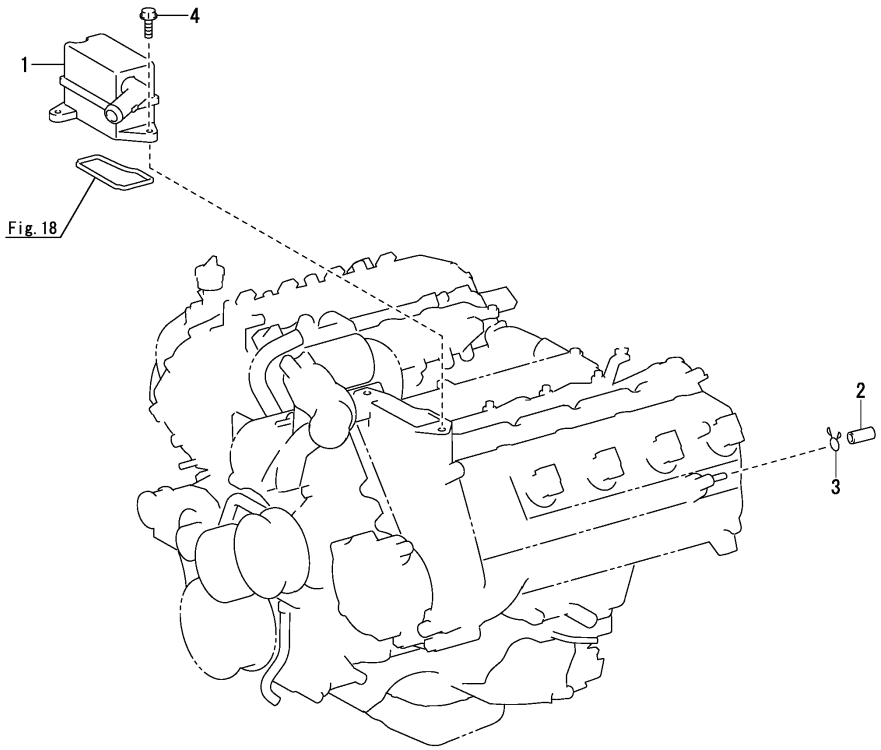

(A)=8LV320 (B)=8LV350 (C)=8LV370 (D)=8LV320Z (E)=8LV350Z (F)=8LV370Z

No.	Lev.	Parts No.	Description	Q'ty (A)	(B)	(C)	(D)	(E)	(F)	I	R
1	1	119798-03010	SEPARATOR ASSY	1	1	1	1	1	1		
2	1	119798-03020	PLUG	1	1	1	1	1	1		
3	1	119798-03030	CLIP, HOSE	1	1	1	1	1	1		
4	1	119798-11310	BOLT, M6X20	3	3	3	3	3	3		

N:Old $\xleftrightarrow[\text{No}]{\text{Yes}}$ New, Q:Old $\xleftrightarrow[\text{Yes}]{\text{No}}$ New, R:Old $\xleftrightarrow[\text{Yes}]{\text{Yes}}$ New, S:Old $\xleftrightarrow[\text{No}]{\text{No}}$ New, W:Add, Z:Discontinued, F:Interchangeable by set, K:Q'ty Change

Copyright (C) YANMAR CO., LTD. All RightsReserved.

Fig.10. TURBOCHARGER

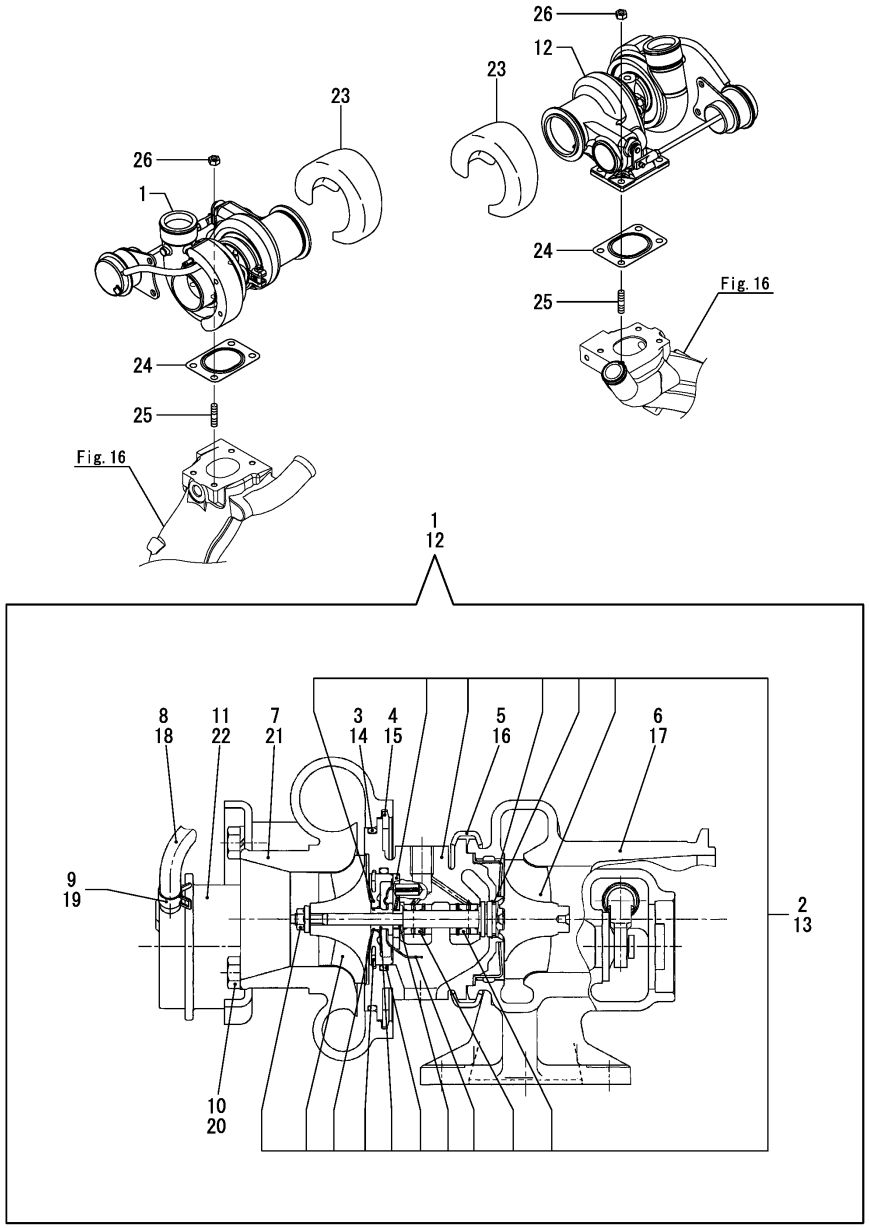

(A)=8LV320 (B)=8LV350 (C)=8LV370 (D)=8LV320Z (E)=8LV350Z (F)=8LV370Z

No.	Lev.	Parts No.	Description	Q'ty (A)	(B)	(C)	(D)	(E)	(F)	I	R
1	1	119798-18010	TURBINE ASSY	1	1	1	1	1	1		
2	2	119798-18030	TURBOCHARGER ASSY	1	1	1	1	1	1		
3	2	119798-18040	O-RING	1	1	1	1	1	1		
4	2	119798-18050	RING, SNAP	1	1	1	1	1	1		
5	2	119798-18060	COUPLING ASSY	1	1	1	1	1	1		
6	2	119798-18070	HOUSING ASSY,TURBINE	1	1	1	1	1	1		
7	2	119798-18080	COMPRESSOR ASSY,RH	1	1	1	1	1	1		
8	2	119798-18090	HOSE,L=150	1	1	1	1	1	1		
9	2	119798-18100	CLIP, HOSE	2	2	2	2	2	2		
10	2	119798-18110	BOLT, W/WASHER	2	2	2	2	2	2		
11	2	119798-18120	ACTUATOR,W/G RH	1	1	1	1	1	1		
12	1	119798-18020	TURBINE ASSY	1	1	1	1	1	1		
13	2	119798-18030	TURBOCHARGER ASSY	1	1	1	1	1	1		
14	2	119798-18040	O-RING	1	1	1	1	1	1		
15	2	119798-18050	RING, SNAP	1	1	1	1	1	1		
16	2	119798-18060	COUPLING ASSY	1	1	1	1	1	1		
17	2	119798-18070	HOUSING ASSY,TURBINE	1	1	1	1	1	1		
18	2	119798-18090	HOSE,L=150	1	1	1	1	1	1		
19	2	119798-18100	CLIP, HOSE	2	2	2	2	2	2		
20	2	119798-18110	BOLT, W/WASHER	2	2	2	2	2	2		
21	2	119798-18130	COMPRESSOR ASSY,LH	1	1	1	1	1	1		
22	2	119798-18140	ACTUATOR,W/G,LH	1	1	1	1	1	1		
23	1	119798-18340	INSULATOR	2	2	2	2	2	2		
24	1	119798-18700	GASKET	2	2	2	2	2	2		
25	1	26223-080182	STUD, M8X 18	8	8	8	8	8	8		
26	1	26703-080002	NUT, M8	8	8	8	8	8	8		

N:Old $\xleftrightarrow[\text{No}]{\text{Yes}}$ New, Q:Old $\xleftrightarrow[\text{Yes}]{\text{No}}$ New, R:Old $\xleftrightarrow[\text{Yes}]{\text{Yes}}$ New, S:Old $\xleftrightarrow[\text{No}]{\text{No}}$ New, W:Add, Z:Discontinued, F:Interchangeable by set, K:Q'ty Change

Copyright (C) YANMAR CO., LTD. All RightsReserved.

Fig.11. INTAKE SILENCER

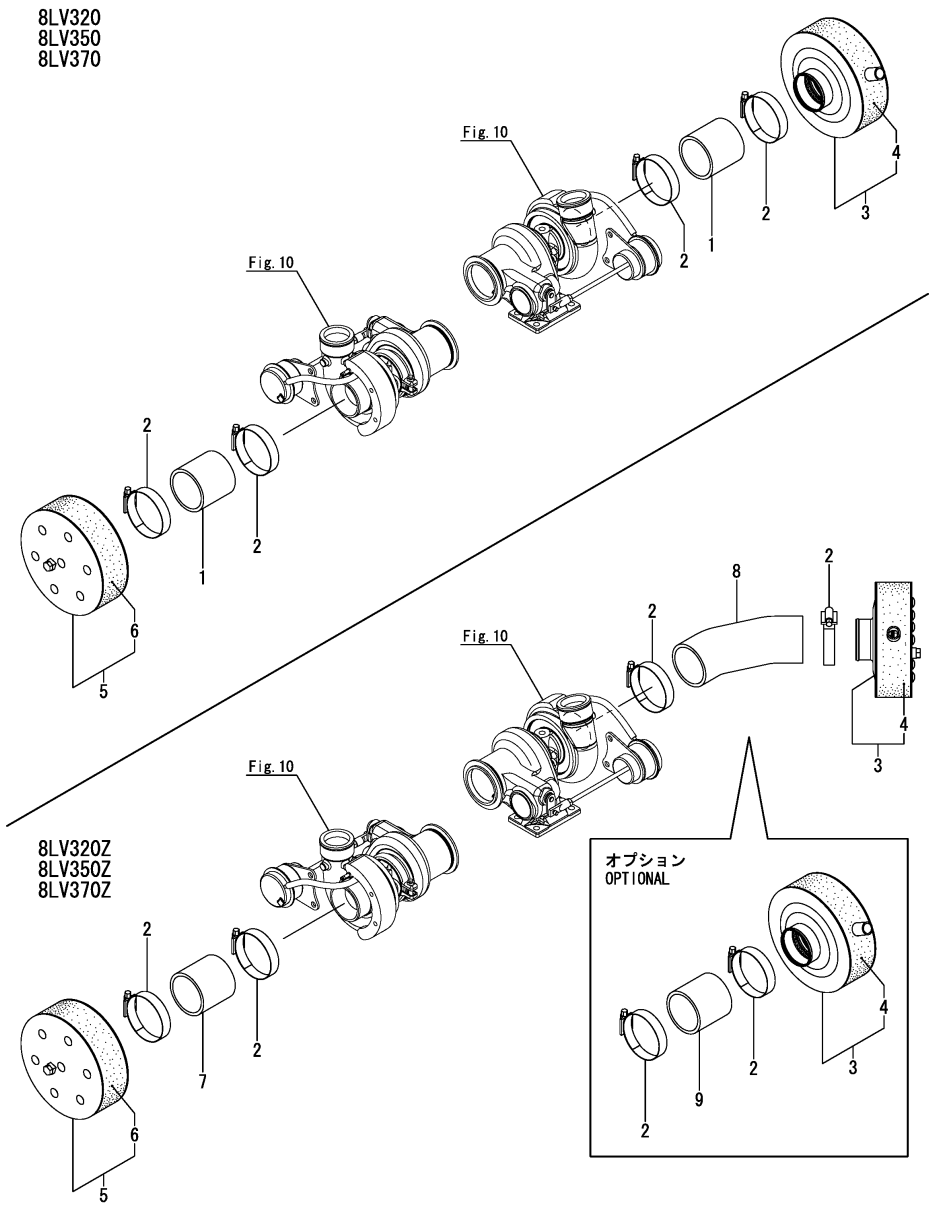

(A)=8LV320 (B)=8LV350 (C)=8LV370 (D)=8LV320Z (E)=8LV350Z (F)=8LV370Z

No.	Lev.	Parts No.	Description	Q'ty (A)	(B)	(C)	(D)	(E)	(F)	I	R
1	1	119798-18710	HOSE	2	2	2					
2	1	119574-18910	CLIP, HOSE	4	4	4	4	4	4		
3	1	119798-18911	SILENCER	1	1	1	1	1	1		
4	2	119173-18880	FILTER, 55MM	1	1	1	1	1	1		
5	1	119798-18920	SILENCER	1	1	1	1	1	1		
6	2	119173-18880	FILTER, 55MM	1	1	1	1	1	1		
7	1	119798-18710	HOSE				1	1	1		
8	1	119799-18710	HOSE				1	1	1		
9	1	119798-18710	HOSE				1	1	1		1

Remarks
(1)Optional parts.(It applies, except for the drive exhaust.)

N:Old ←Yes/No→ New, Q:Old ←No/Yes→ New, R:Old ←Yes/Yes→ New, S:Old ←No/No→ New, W:Add, Z:Discontinued, F:Interchangeable by set, K:Q'ty Change

Copyright (C) YANMAR CO., LTD. All RightsReserved.

Fig.12. EXHAUST BEND & MIXING ELBOW(8LV320,350,370)

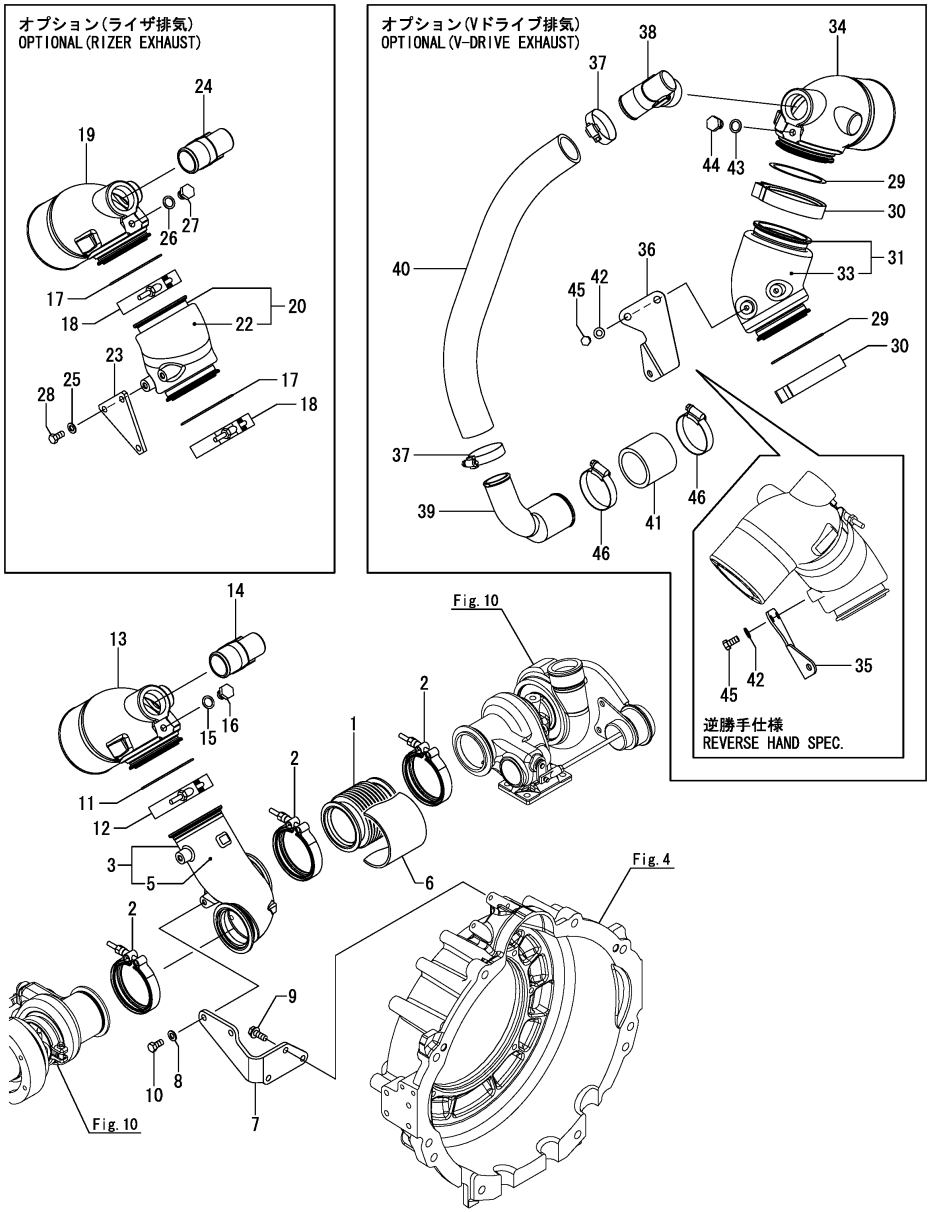

(A)=8LV320 (B)=8LV350 (C)=8LV370 (D)=8LV320Z (E)=8LV350Z (F)=8LV370Z

No.	Lev.	Parts No.	Description	Q'ty (A)	(B)	(C)	(D)	(E)	(F)	I	R
1	1	119798-13200	JOINT, EXPANSION	1	1	1					
2	1	119798-13450	CLAMP	3	3	3					
3	1	119798-13510	BEND ASSY	1	1	1					
5	2	119798-13530	INSULATOR	1	1	1					
6	1	119798-13581	INSULATOR	1	1	1					
7	1	119798-13750	BRACKET, BEND	1	1	1					
8	1	22113-080000	WASHER, 8	2	2	2					
9	1	26106-080202	BOLT, M8X 20 PLATED	3	3	3					
10	1	26113-080162	BOLT M 8X 16 (STEN	2	2	2					
11	1	119773-13250	GASKET	1	1	1					
12	1	119773-13300	CLAMP	1	1	1					
13	1	119773-13501	ELBOW	1	1	1					
14	1	119775-48640	JOINT	1	1	1					
15	1	23414-130000	GASKET, 13X1.0	1	1	1					
16	1	23893-020002	PLUG, G1/4	1	1	1					
17	1	119773-13250	GASKET	2	2	2					1
18	1	119773-13300	CLAMP	2	2	2					1
19	1	119773-13501	ELBOW	1	1	1					1
20	1	119798-13550	BEND ASSY	1	1	1					1
22	2	119798-13570	INSULATOR	1	1	1					1
23	1	119798-13760	BRACKET, BEND	1	1	1					1
24	1	119775-48640	JOINT	1	1	1					1
25	1	22113-080000	WASHER, 8	3	3	3					1
26	1	23414-130000	GASKET, 13X1.0	1	1	1					1
27	1	23893-020002	PLUG, G1/4	1	1	1					1
28	1	26113-080162	BOLT M 8X 16 (STEN	3	3	3					1
29	1	119773-13250	GASKET	2	2	2					2
30	1	119773-13300	CLAMP	2	2	2					2
31	1	119799-13350	BEND ASSY	1	1	1					2
33	2	119799-13370	INSULATOR	1	1	1					2
34	1	119773-13501	ELBOW	1	1	1					2
35	1	119799-13540	BRACKET, BEND	1	1	1					2
36	1	119799-13550	BRACKET, BEND	1	1	1					2
37	1	119172-48480	CLIP, HOSE 48	2	2	2					2
38	1	119775-48640	JOINT	1	1	1					2
39	1	119798-49470	JOINT	1	1	1					2
40	1	119798-49480	HOSE, WATER 38X650	1	1	1					2
41	1	127620-49720	JOINT, RUBBER	1	1	1					2
42	1	22113-080000	WASHER, 8	3	3	3					2
43	1	23414-130000	GASKET, 13X1.0	1	1	1					2
44	1	23893-020002	PLUG, G1/4	1	1	1					2
45	1	26113-080162	BOLT M 8X 16 (STEN	3	3	3					2
46	1	43730-552161	CLIP HOSE,61	2	2	2					2

Remarks
(1)Optional parts.(Riser exhaust)
(2)Optional parts.(V-drive exhaust)

N:Old $\xleftrightarrow[\text{No}]{\text{Yes}}$ New, Q:Old $\xleftrightarrow[\text{Yes}]{\text{No}}$ New, R:Old $\xleftrightarrow[\text{Yes}]{\text{Yes}}$ New, S:Old $\xleftrightarrow[\text{No}]{\text{No}}$ New, W:Add, Z:Discontinued, F:Interchangeable by set, K:Q'ty Change

Copyright (C) YANMAR CO., LTD. All RightsReserved.

Fig.13. EXHAUST BEND & MIXING ELBOW(8LV320Z,350Z,370Z)

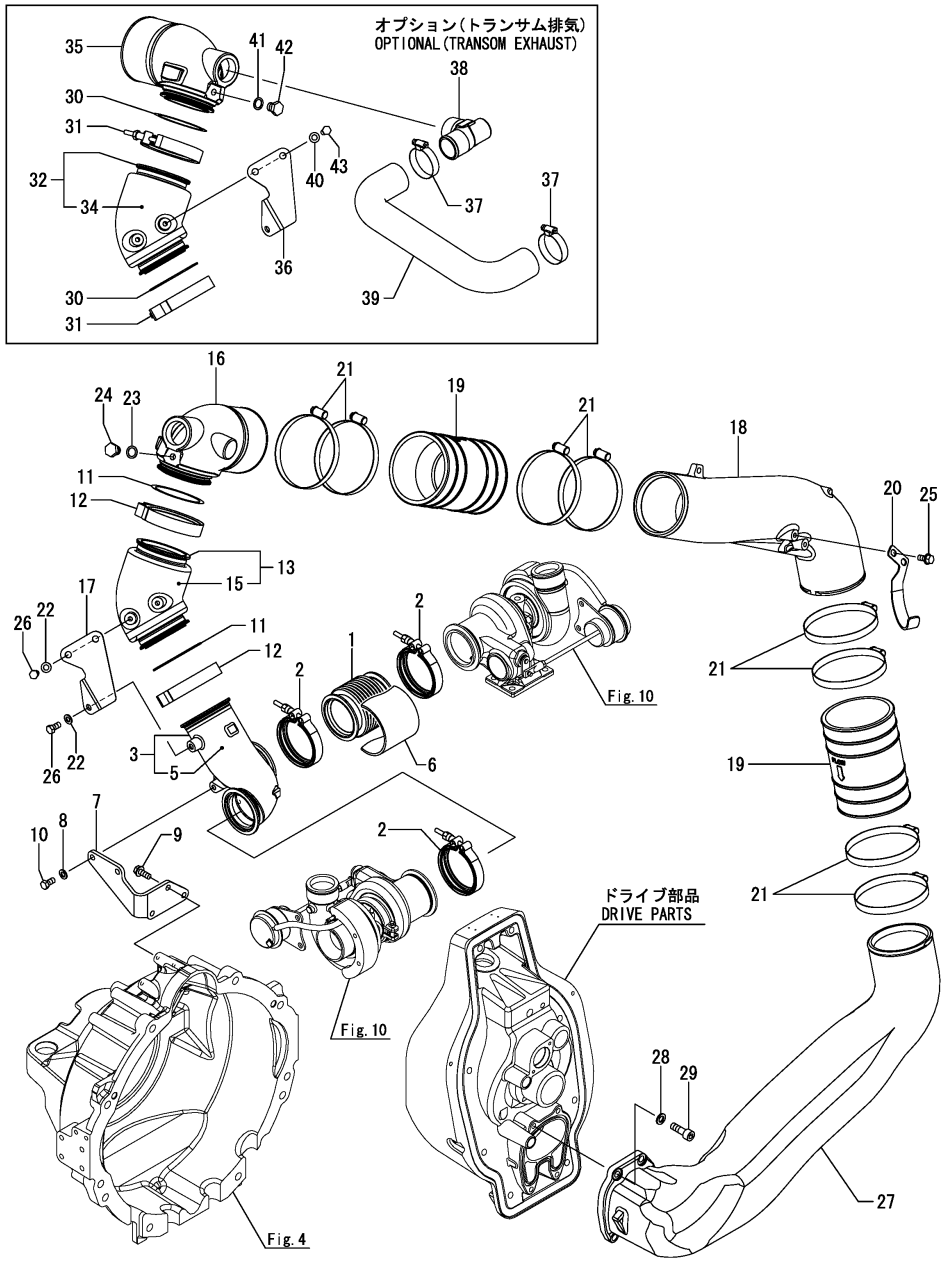

(A)=8LV320 (B)=8LV350 (C)=8LV370 (D)=8LV320Z (E)=8LV350Z (F)=8LV370Z

No.	Lev.	Parts No.	Description	Q'ty (A)	(B)	(C)	(D)	(E)	(F)	I	R
1	1	119798-13200	JOINT, EXPANSION				1	1	1		
2	1	119798-13450	CLAMP				3	3	3		
3	1	119798-13510	BEND ASSY				1	1	1		
5	2	119798-13530	INSULATOR				1	1	1		
6	1	119798-13581	INSULATOR				1	1	1		
7	1	119798-13750	BRACKET, BEND				1	1	1		
8	1	22113-080000	WASHER, 8				2	2	2		
9	1	26106-080202	BOLT, M8X 20 PLATED				3	3	3		
10	1	26113-080162	BOLT M 8X 16 (STEN				2	2	2		
11	1	119773-13250	GASKET				2	2	2		
12	1	119773-13300	CLAMP				2	2	2		
13	1	119799-13350	BEND ASSY				1	1	1		
15	2	119799-13370	INSULATOR				1	1	1		
16	1	119773-13501	ELBOW				1	1	1		
17	1	119799-13550	BRACKET, BEND				1	1	1		
18	1	119799-13650	PIPE, EXHAUST				1	1	1		
19	1	119175-13800	JOINT				2	2	2		
20	1	119799-18720	SUPPORT				1	1	1		
21	1	119172-48010	CLIP, HOSE 127				8	8	8		
22	1	22113-080000	WASHER, 8				3	3	3		
23	1	23414-130000	GASKET, 13X1.0				1	1	1		
24	1	23893-020002	PLUG, G1/4				1	1	1		
25	1	26106-080162	BOLT, M8X 16 PLATED				2	2	2		
26	1	26113-080162	BOLT M 8X 16 (STEN				3	3	3		
27	1	119799-13640	PIPE, EXHAUST				1	1	1		
28	1	22113-100000	WASHER, 10				4	4	4		
29	1	26453-100302	BOLT, M10X 30				4	4	4		
30	1	119773-13250	GASKET				2	2	2		1
31	1	119773-13300	CLAMP				2	2	2		1
32	1	119799-13350	BEND ASSY				1	1	1		1
34	2	119799-13370	INSULATOR				1	1	1		1
35	1	119773-13501	ELBOW				1	1	1		1
36	1	119799-13560	BRACKET, BEND				1	1	1		1
37	1	119172-48480	CLIP, HOSE 48				2	2	2		1
38	1	119775-48640	JOINT				1	1	1		1
39	1	119799-49780	HOSE, MIXING				1	1	1		1
40	1	22113-080000	WASHER, 8				3	3	3		1
41	1	23414-130000	GASKET, 13X1.0				1	1	1		1
42	1	23893-020002	PLUG, G1/4				1	1	1		1
43	1	26113-080162	BOLT M 8X 16 (STEN				3	3	3		1

Remarks
(1)Optional parts.(Transom exhaust)

N:Old ←Yes/No→ New, Q:Old ←No/Yes→ New, R:Old ←Yes/Yes→ New, S:Old ←No/No→ New, W:Add, Z:Discontinued, F:Interchangeable by set, K:Q'ty Change

Copyright (C) YANMAR CO., LTD. All RightsReserved.

Fig.14. AIR COOLER

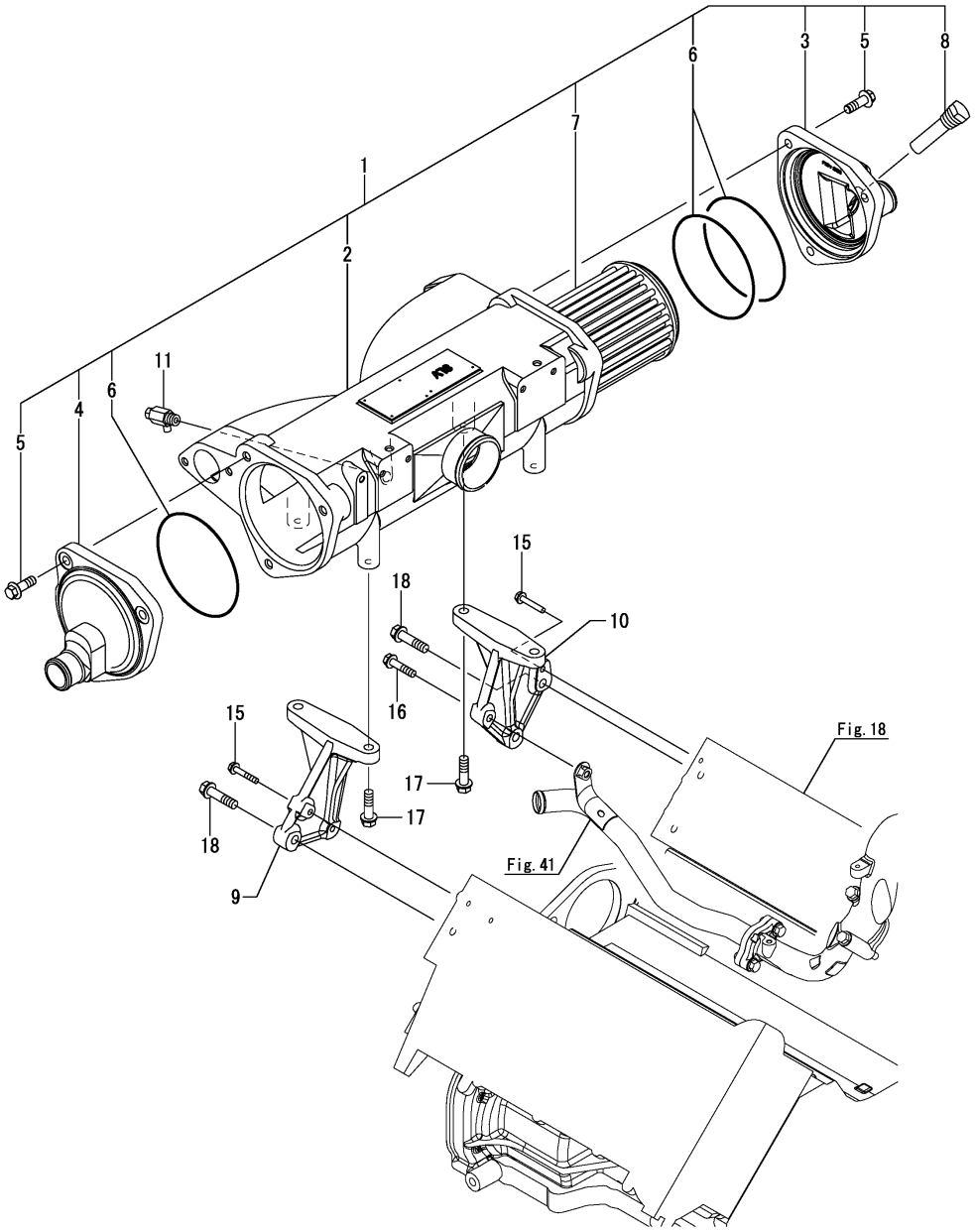

(A)=8LV320 (B)=8LV350 (C)=8LV370 (D)=8LV320Z (E)=8LV350Z (F)=8LV370Z

No.	Lev.	Parts No.	Description	Q'ty (A)	(B)	(C)	(D)	(E)	(F)	I	R
1	1	119798-18460	COOLER ASSY, INTER	1	1	1	1	1	1		
2	2	119798-18400	CYLINDER	1	1	1	1	1	1		
3	2	119798-18420	HEAD	1	1	1	1	1	1		
4	2	119798-18430	HEAD	1	1	1	1	1	1		
5	2	119798-18440	BOLT, FLANGE M10X30	6	6	6	6	6	6		
6	2	119798-18450	O-RING	3	3	3	3	3	3		
7	2	119798-18470	TUBESTACK	1	1	1	1	1	1		
8	2	119574-18790	ZINC, ANTI-CORROSIVE	1	1	1	1	1	1		
9	1	119798-18550	BRACKET	1	1	1	1	1	1		
10	1	119798-18560	BRACKET	1	1	1	1	1	1		
11	1	119620-49290	COCK ASSY, 1/4	1	1	1	1	1	1		
15	1	26106-060352	BOLT, M6X 35 PLATED	3	3	3	3	3	3		
16	1	26106-080352	BOLT, M8X 35 PLATED	1	1	1	1	1	1		
17	1	26106-100352	BOLT, M10X 35 PLATED	4	4	4	4	4	4		
18	1	26136-100402	BOLT, M10X 40 PLATED	3	3	3	3	3	3		

N:Old $\xleftrightarrow[\text{No}]{\text{Yes}}$ New, Q:Old $\xleftrightarrow[\text{Yes}]{\text{No}}$ New, R:Old $\xleftrightarrow[\text{Yes}]{\text{Yes}}$ New, S:Old $\xleftrightarrow[\text{No}]{\text{No}}$ New, W:Add, Z:Discontinued, F:Interchangeable by set, K:Q'ty Change

Copyright (C) YANMAR CO., LTD. All RightsReserved.

Fig.15. AIR DUCT

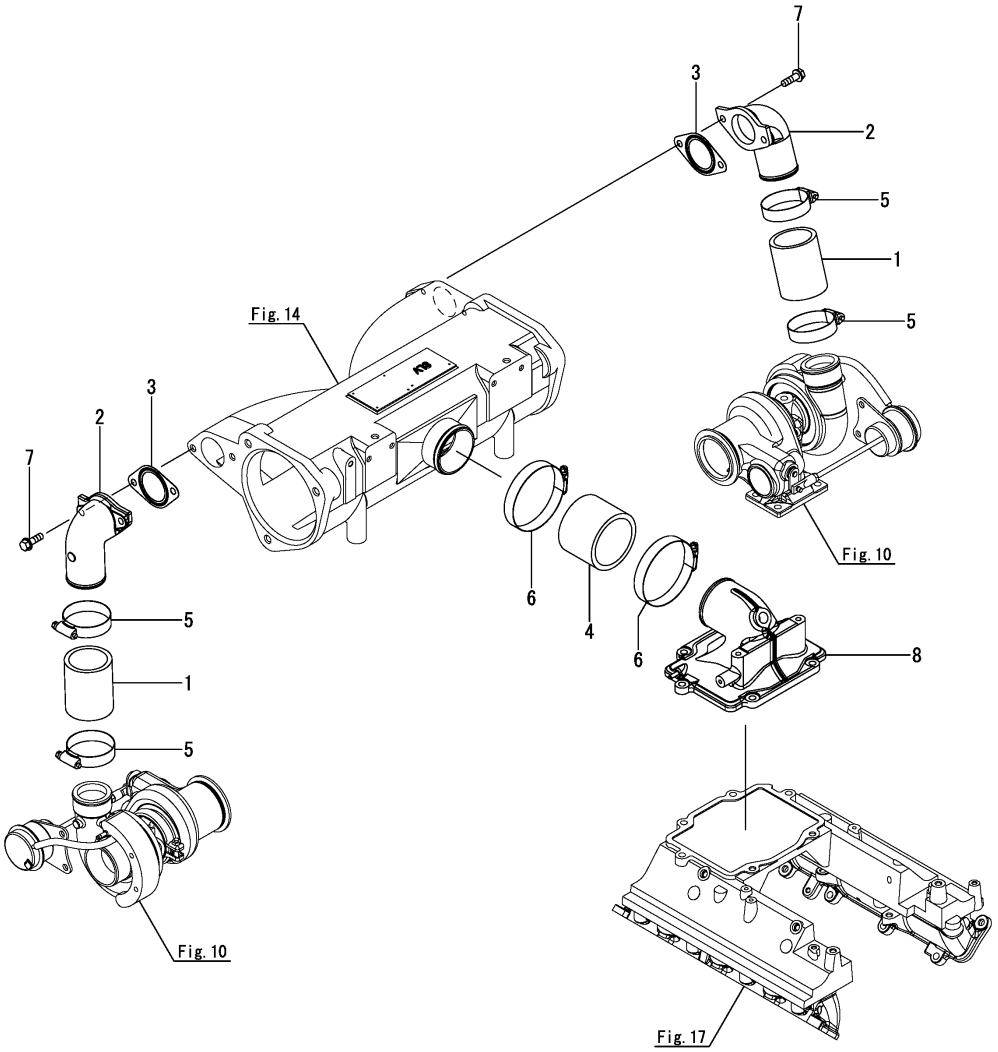

(A)=8LV320 (B)=8LV350 (C)=8LV370 (D)=8LV320Z (E)=8LV350Z (F)=8LV370Z

No.	Lev.	Parts No.	Description	Q'ty (A)	(B)	(C)	(D)	(E)	(F)	I	R
1	1	119798-18621	HOSE	2	2	2	2	2	2		
2	1	119798-18630	DUCT, AIR	2	2	2	2	2	2		
3	1	119798-18640	GASKET	2	2	2	2	2	2		
4	1	119798-18780	HOSE, AIR DUCT	1	1	1	1	1	1		
5	1	127488-18910	CLIP, HOSE	4	4	4	4	4	4		
6	1	127687-18910	CLIP, HOSE	2	2	2	2	2	2		
7	1	26106-080252	BOLT, M8X 25 PLATED	4	4	4	4	4	4		
8	1	119798-18500	DUCT, AIR	1	1	1	1	1	1		

N:Old $\xleftarrow[\text{No}]{\text{Yes}}$ New, Q:Old $\xleftarrow[\text{Yes}]{\text{No}}$ New, R:Old $\xleftarrow[\text{Yes}]{\text{Yes}}$ New, S:Old $\xleftarrow[\text{No}]{\text{No}}$ New, W:Add, Z:Discontinued, F:Interchangeable by set, K:Q'ty Change

Copyright (C) YANMAR CO., LTD. All RightsReserved.

Fig.16. EXHAUST MANIFOLD

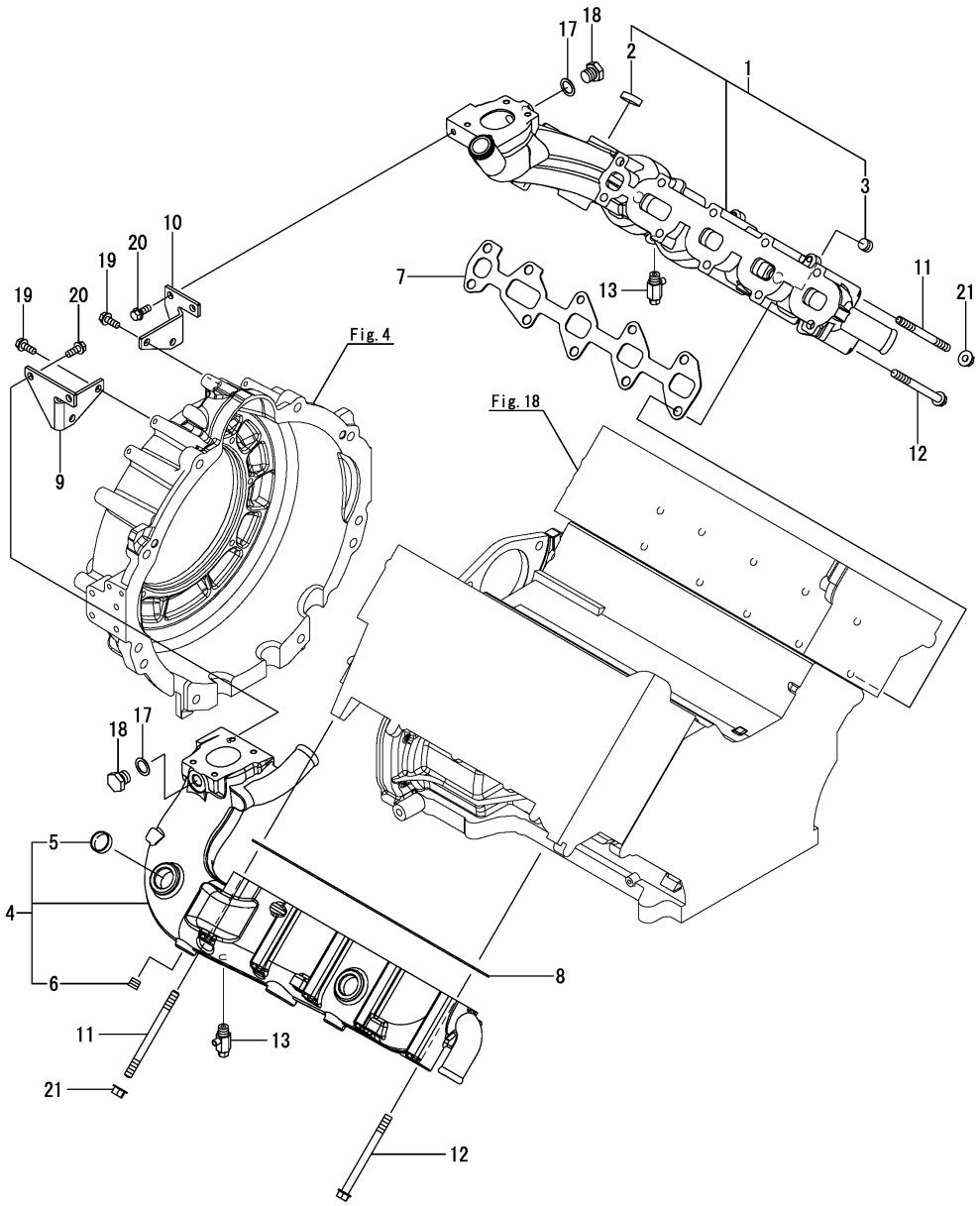

(A)=8LV320 (B)=8LV350 (C)=8LV370 (D)=8LV320Z (E)=8LV350Z (F)=8LV370Z

No.	Lev.	Parts No.	Description	Q'ty (A)	(B)	(C)	(D)	(E)	(F)	I	R
1	1	119798-13010	MANIFOLD, EXHAUST	1	1	1	1	1	1		
2	2	119773-13160	PLUG, 28	6	6	6	6	6	6		
3	2	23876-030000	PLUG, R03	2	2	2	2	2	2		
4	1	119798-13050	MANIFOLD, EXHAUST	1	1	1	1	1	1		
5	2	119773-13160	PLUG, 28	6	6	6	6	6	6		
6	2	23876-030000	PLUG, R03	2	2	2	2	2	2		
7	1	119798-13220	GASKET, MANIFOLD	1	1	1	1	1	1		
8	1	119798-13230	GASKET, MANIFOLD	1	1	1	1	1	1		
9	1	119798-13640	BRACKET	1	1	1	1	1	1		
10	1	119798-13650	BRACKET	1	1	1	1	1	1		
11	1	119798-13810	STUD	4	4	4	4	4	4		
12	1	119798-13820	BOLT	16	16	16	16	16	16		
13	1	119620-49290	COCK ASSY, 1/4	2	2	2	2	2	2		
17	1	23414-170000	GASKET, 17X1.0	2	2	2	2	2	2		
18	1	23894-030002	PLUG, G3/8	2	2	2	2	2	2		
19	1	26106-080182	BOLT, M8X 18 PLATED	4	4	4	4	4	4		
20	1	26106-080202	BOLT, M8X 20 PLATED	4	4	4	4	4	4		
21	1	26376-100002	NUT, M10	4	4	4	4	4	4		

N:Old $\xleftrightarrow[\text{No}]{\text{Yes}}$ New, Q:Old $\xleftrightarrow[\text{Yes}]{\text{No}}$ New, R:Old $\xleftrightarrow[\text{Yes}]{\text{Yes}}$ New, S:Old $\xleftrightarrow[\text{No}]{\text{No}}$ New, W:Add, Z:Discontinued, F:Interchangeable by set, K:Q'ty Change

Copyright (C) YANMAR CO., LTD. All RightsReserved.

Fig.17. SUCTION MANIFOLD

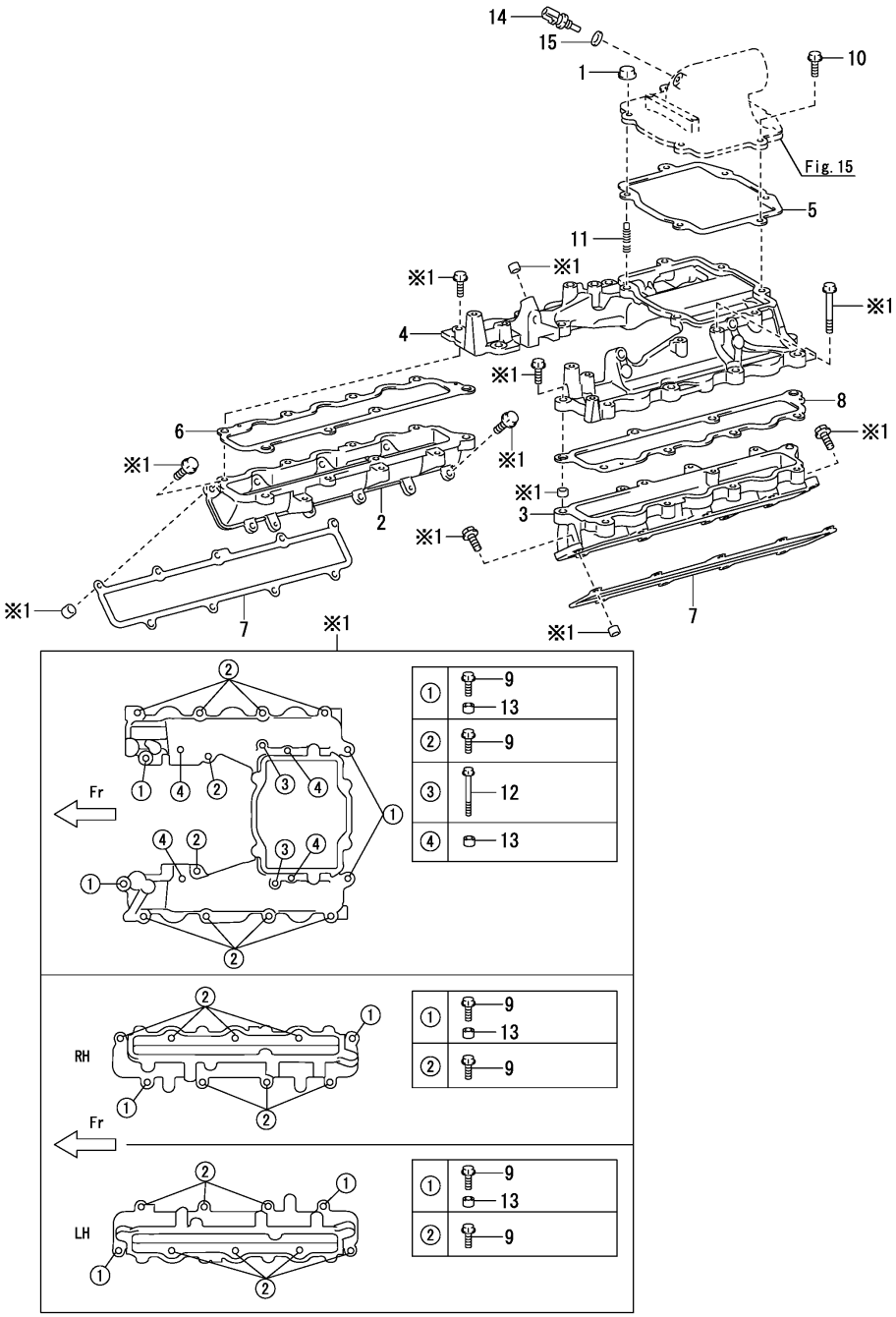

(A)=8LV320 (B)=8LV350 (C)=8LV370 (D)=8LV320Z (E)=8LV350Z (F)=8LV370Z

No.	Lev.	Parts No.	Description	Q'ty (A)	(B)	(C)	(D)	(E)	(F)	I	R
1	1	119798-01800	NUT, M8	2	2	2	2	2	2		
2	1	119798-12010	MANIFOLD, INTAKE	1	1	1	1	1	1		
3	1	119798-12020	MANIFOLD, INTAKE	1	1	1	1	1	1		
4	1	119798-12030	MANIFOLD, INTAKE	1	1	1	1	1	1		
5	1	119798-12040	GASKET	1	1	1	1	1	1		
6	1	119798-12050	GASKET, MANIFOLD	1	1	1	1	1	1		
7	1	119798-12060	GASKET	2	2	2	2	2	2		
8	1	119798-12070	GASKET	1	1	1	1	1	1		
9	1	119798-14150	BOLT, M8X25	32	32	32	32	32	32		
10	1	119798-14150	BOLT, M8X25	4	4	4	4	4	4		
11	1	119798-33060	STUD	2	2	2	2	2	2		
12	1	119798-49720	BOLT, FLANGE M8X70	2	2	2	2	2	2		
13	1	119770-90020	PIN	12	12	12	12	12	12		
14	1	119798-91630	SENSOR	1	1	1	1	1	1		
15	1	119798-91640	GASKET	1	1	1	1	1	1		

N:Old $\xleftrightarrow[\text{No}]{\text{Yes}}$ New, Q:Old $\xleftrightarrow[\text{Yes}]{\text{No}}$ New, R:Old $\xleftrightarrow[\text{Yes}]{\text{Yes}}$ New, S:Old $\xleftrightarrow[\text{No}]{\text{No}}$ New, W:Add, Z:Discontinued, F:Interchangeable by set, K:Q'ty Change

Copyright (C) YANMAR CO., LTD. All RightsReserved.

Fig.18. CYLINDER HEAD

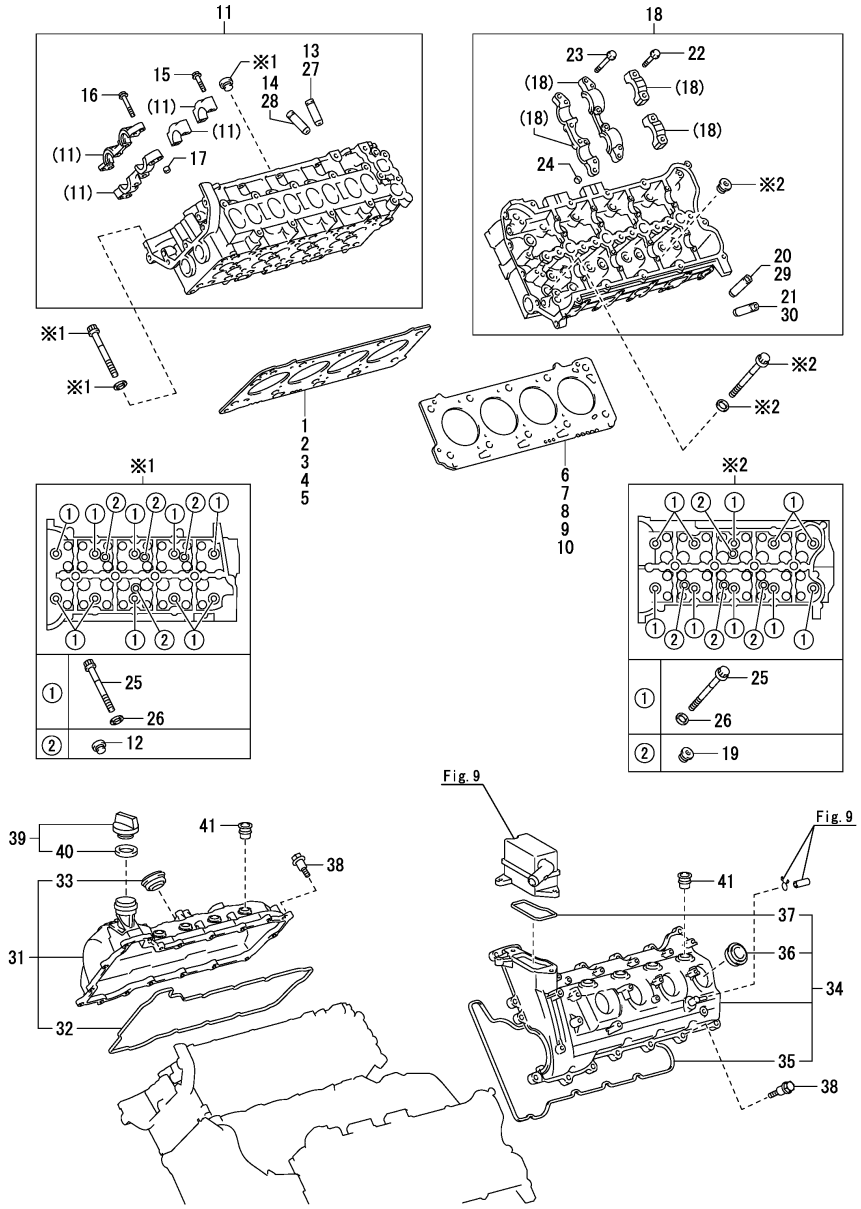

(A)=8LV320 (B)=8LV350 (C)=8LV370 (D)=8LV320Z (E)=8LV350Z (F)=8LV370Z

No.	Lev.	Parts No.	Description	Q'ty (A)	(B)	(C)	(D)	(E)	(F)	I	R
1	1	119798-01300	GASKET, HEAD	1	1	1	1	1	1		1
2	1	119798-01310	GASKET, HEAD	1	1	1	1	1	1		1
3	1	119798-01320	GASKET, HEAD	1	1	1	1	1	1		1
4	1	119798-01330	GASKET, HEAD	1	1	1	1	1	1		1
5	1	119798-01340	GASKET, HEAD	1	1	1	1	1	1		1
6	1	119798-01350	GASKET, HEAD	1	1	1	1	1	1		1
7	1	119798-01360	GASKET, HEAD	1	1	1	1	1	1		1
8	1	119798-01370	GASKET, HEAD	1	1	1	1	1	1		1
9	1	119798-01380	GASKET, HEAD	1	1	1	1	1	1		1
10	1	119798-01390	GASKET, HEAD	1	1	1	1	1	1		1
11	1	119798-11010	HEAD ASSY, CYLINDER	1	1	1	1	1	1		
12	2	119798-11050	PLUG	4	4	4	4	4	4		
13	2	119798-11060	BUSH, STD	8	8	8	8	8	8		
14	2	119798-11060	BUSH, STD	8	8	8	8	8	8		
15	2	119798-11080	BOLT, M6X30	8	8	8	8	8	8		
16	2	119798-11090	BOLT, M8X60	2	2	2	2	2	2		
17	2	119770-90020	PIN	2	2	2	2	2	2		
18	1	119798-11020	HEAD ASSY, CYLINDER	1	1	1	1	1	1		
19	2	119798-11050	PLUG	4	4	4	4	4	4		
20	2	119798-11060	BUSH, STD	8	8	8	8	8	8		
21	2	119798-11060	BUSH, STD	8	8	8	8	8	8		
22	2	119798-11080	BOLT, M6X30	8	8	8	8	8	8		
23	2	119798-11090	BOLT, M8X60	2	2	2	2	2	2		
24	2	119770-90020	PIN	2	2	2	2	2	2		
25	1	119798-11030	BOLT, HEAD	20	20	20	20	20	20		
26	1	119798-11040	SPACER	20	20	20	20	20	20		
27	1	119798-11070	BUSH, OVER SIZE	8	8	8	8	8	8		2
28	1	119798-11070	BUSH, OVER SIZE	8	8	8	8	8	8		2
29	1	119798-11070	BUSH, OVER SIZE	8	8	8	8	8	8		2
30	1	119798-11070	BUSH, OVER SIZE	8	8	8	8	8	8		2
31	1	119798-11210	COVER, CYLINDER	1	1	1	1	1	1		
32	2	119798-11240	GASKET, BONNET	1	1	1	1	1	1		
33	2	119798-11260	GASKET	4	4	4	4	4	4		
34	1	119798-11220	COVER, CYLINDER	1	1	1	1	1	1		
35	2	119798-11250	GASKET, BONNET	1	1	1	1	1	1		
36	2	119798-11260	GASKET	4	4	4	4	4	4		
37	2	119798-11290	GASKET	1	1	1	1	1	1		
38	1	119798-11230	BOLT, M6	18	18	18	18	18	18		
39	1	119798-11270	CAP, FILLER	1	1	1	1	1	1		
40	2	119798-11280	GASKET	1	1	1	1	1	1		
41	1	119798-11300	SEAL, NOZZLE HOLDER	8	8	8	8	8	8		

Remarks
(1)Please refer to the introduction for how to choose.
(2)Over sized(O.S.=0.05)parts.

N:Old $\xleftrightarrow[\text{No}]{\text{Yes}}$ New, Q:Old $\xleftrightarrow[\text{Yes}]{\text{No}}$ New, R:Old $\xleftrightarrow[\text{Yes}]{\text{Yes}}$ New, S:Old $\xleftrightarrow[\text{No}]{\text{No}}$ New, W:Add, Z:Discontinued, F:Interchangeable by set, K:Q'ty Change

Copyright (C) YANMAR CO., LTD. All RightsReserved.

Fig.19. CYLINDER HEAD COVER

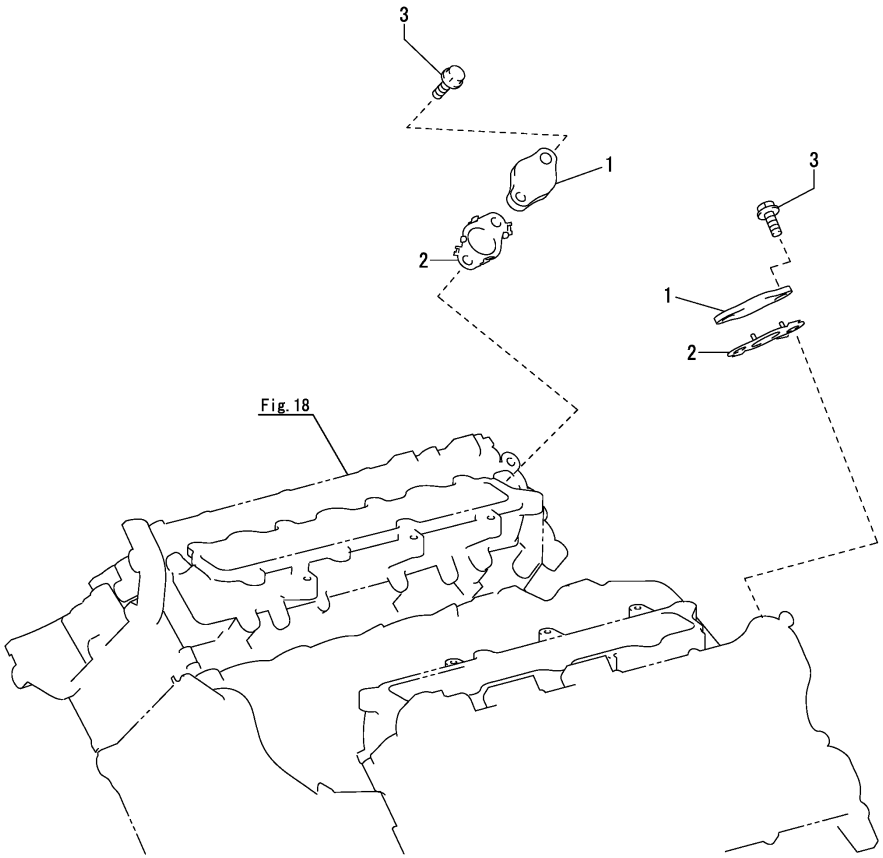

(A)=8LV320 (D)=8LV320Z
(B)=8LV350 (E)=8LV350Z
(C)=8LV370 (F)=8LV370Z

No.	Lev.	Parts No.	Description	Q'ty (A)	(B)	(C)	(D)	(E)	(F)	I	R
1	1	119798-11180	PLATE	2	2	2	2	2	2		
2	1	119798-11190	GASKET	2	2	2	2	2	2		
3	1	119798-14150	BOLT, M8X25	4	4	4	4	4	4		

N:Old $\xleftrightarrow[\text{No}]{\text{Yes}}$ New, Q:Old $\xleftrightarrow[\text{Yes}]{\text{No}}$ New, R:Old $\xleftrightarrow[\text{Yes}]{\text{Yes}}$ New, S:Old $\xleftrightarrow[\text{No}]{\text{No}}$ New, W:Add, Z:Discontinued, F:Interchangeable by set, K:Q'ty Change

Copyright (C) YANMAR CO., LTD. All RightsReserved.

Fig.20. ENGINE LIFTER

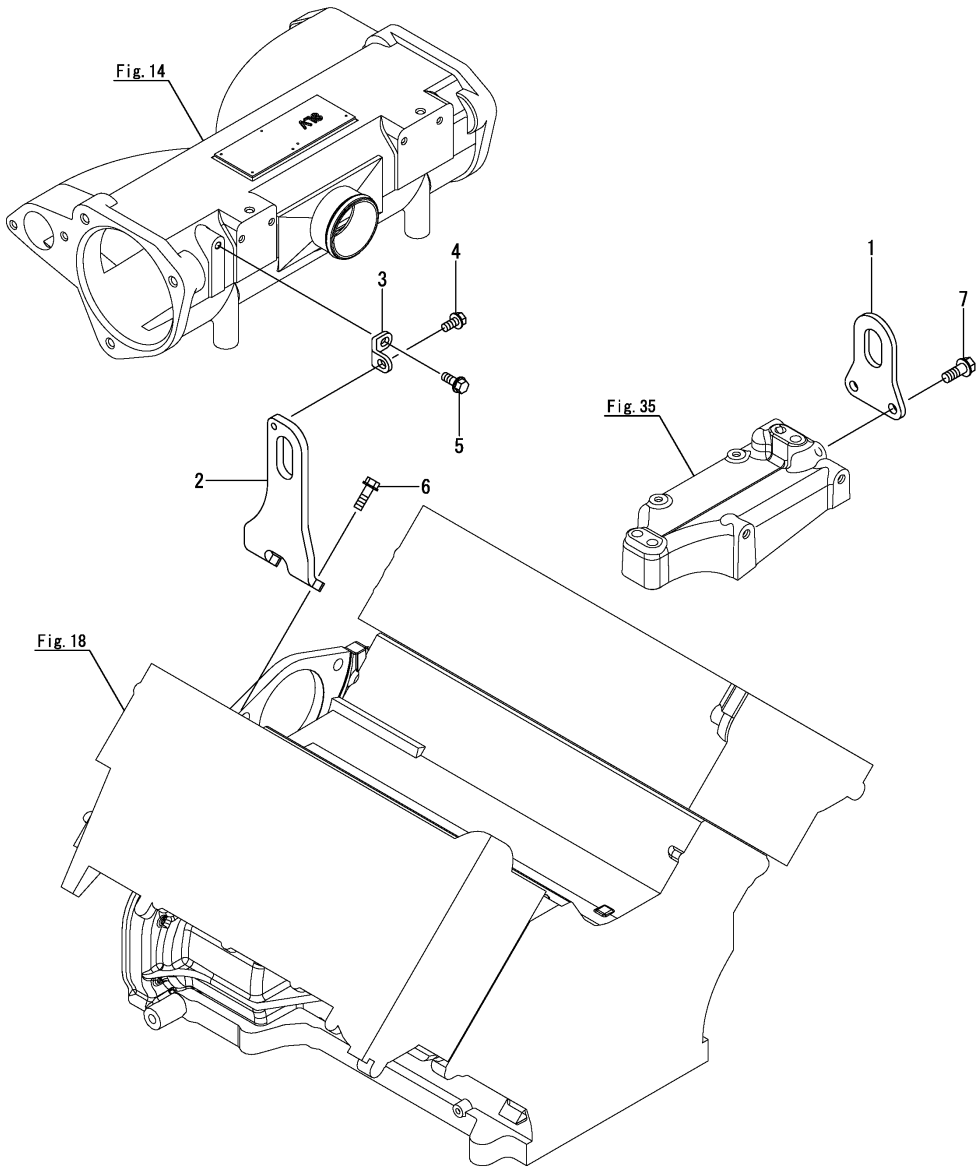

(A)=8LV320 (B)=8LV350 (C)=8LV370 (D)=8LV320Z (E)=8LV350Z (F)=8LV370Z

No.	Lev.	Parts No.	Description	Q'ty (A)	(B)	(C)	(D)	(E)	(F)	I	R
1	1	119798-07650	LIFTER	1	1	1	1	1	1		
2	1	119798-07750	LIFTER	1	1	1	1	1	1		
3	1	119798-07790	SUPPORT	1	1	1	1	1	1		
4	1	26106-080162	BOLT, M8X 16 PLATED	1	1	1	1	1	1		
5	1	26106-080202	BOLT, M8X 20 PLATED	1	1	1	1	1	1		
6	1	26106-080252	BOLT, M8X 25 PLATED	2	2	2	2	2	2		
7	1	26136-100252	BOLT, M10X 25 PLATED	2	2	2	2	2	2		

N:Old $\xleftrightarrow[\text{No}]{\text{Yes}}$ New, Q:Old $\xleftrightarrow[\text{Yes}]{\text{No}}$ New, R:Old $\xleftrightarrow[\text{Yes}]{\text{Yes}}$ New, S:Old $\xleftrightarrow[\text{No}]{\text{No}}$ New, W:Add, Z:Discontinued, F:Interchangeable by set, K:Q'ty Change

Copyright (C) YANMAR CO., LTD. All RightsReserved.

Fig.21. TOP COVER

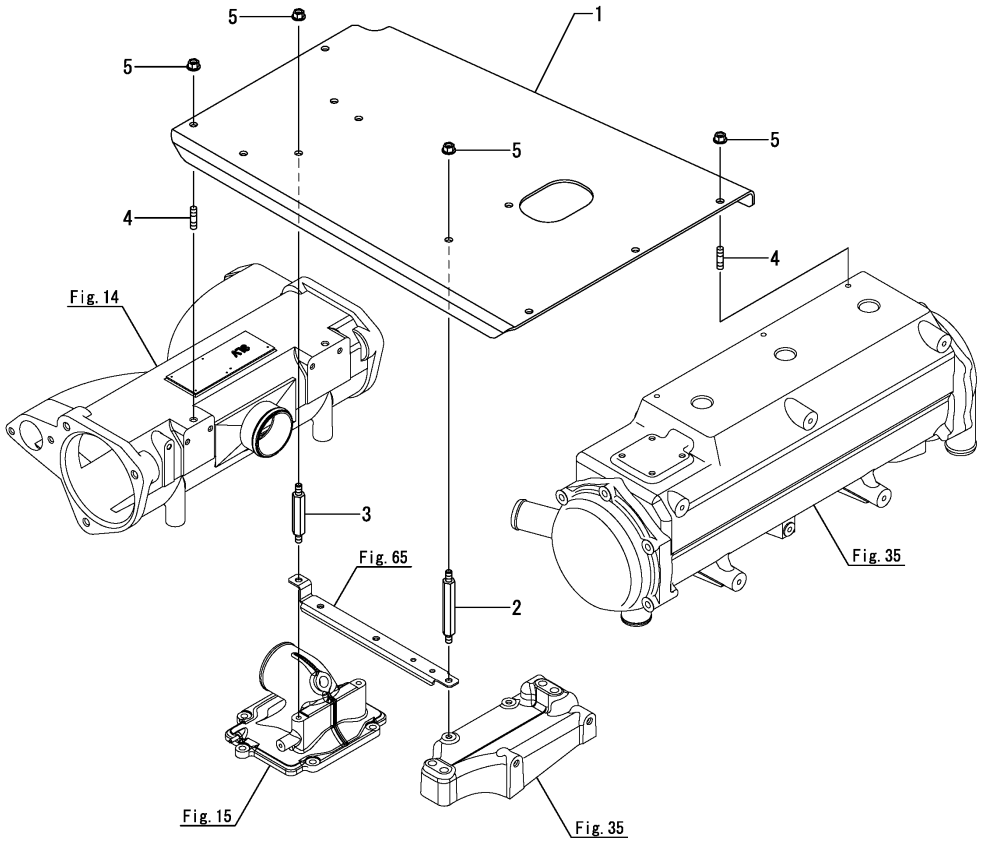

(A)=8LV320 (D)=8LV320Z
(B)=8LV350 (E)=8LV350Z
(C)=8LV370 (F)=8LV370Z

No.	Lev.	Parts No.	Description	Q'ty (A)	(B)	(C)	(D)	(E)	(F)	I	R
1	1	119798-09320	COVER	1	1	1	1	1	1		
2	1	119798-09330	BOLT	2	2	2	2	2	2		
3	1	119798-09340	BOLT	2	2	2	2	2	2		
4	1	26226-080162	STUD, M8X 16	5	5	5	5	5	5		
5	1	26366-080002	NUT, M8	9	9	9	9	9	9		

N:Old $\xleftrightarrow[\text{No}]{\text{Yes}}$ New, Q:Old $\xleftrightarrow[\text{Yes}]{\text{No}}$ New, R:Old $\xleftrightarrow[\text{Yes}]{\text{Yes}}$ New, S:Old $\xleftrightarrow[\text{No}]{\text{No}}$ New, W:Add, Z:Discontinued, F:Interchangeable by set, K:Q'ty Change

Copyright (C) YANMAR CO., LTD. All RightsReserved.

Fig.22. CAMSHAFT

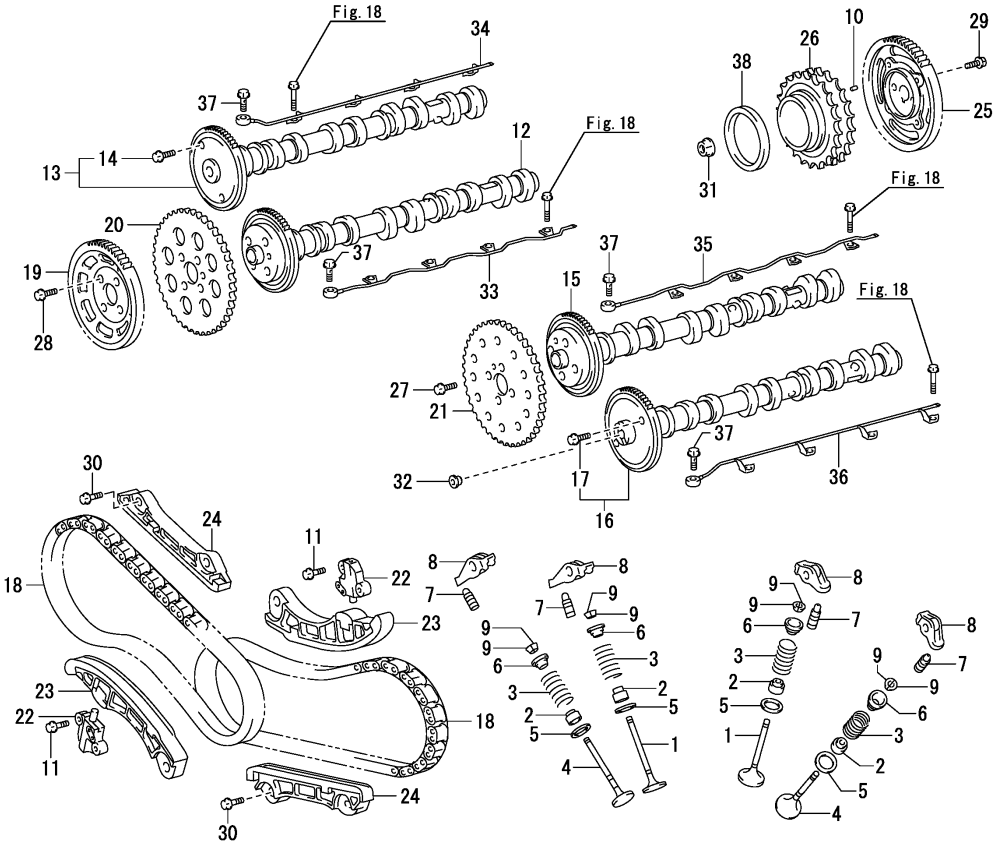

(A)=8LV320 (B)=8LV350 (C)=8LV370 (D)=8LV320Z (E)=8LV350Z (F)=8LV370Z

No.	Lev.	Parts No.	Description	Q'ty (A)	(B)	(C)	(D)	(E)	(F)	I	R
1	1	119798-11100	VALVE, SUCTION	16	16	16	16	16	16		
2	1	119798-11110	SEAL, VALVE STEM	32	32	32	32	32	32		
3	1	119798-11120	SPRING	32	32	32	32	32	32		
4	1	119798-11130	VALVE, EXHAUST	16	16	16	16	16	16		
5	1	119798-11140	SEAT, VALVE	32	32	32	32	32	32		
6	1	119798-11150	RETAINER, SPRING	32	32	32	32	32	32		
7	1	119798-11160	ADJUSTER	32	32	32	32	32	32		
8	1	119798-11170	ARM, ROCKER	32	32	32	32	32	32		
9	1	119798-11200	LOCK, RETAINER	64	64	64	64	64	64		
10	1	119798-01080	PIN, STRAIGHT L12 D4	1	1	1	1	1	1		
11	1	119798-11080	BOLT, M6X30	4	4	4	4	4	4		
12	1	119798-14010	CAMSHAFT ASSY	1	1	1	1	1	1		
13	1	119798-14020	CAMSHAFT ASSY	1	1	1	1	1	1		
14	2	119798-14140	BOLT, M6X16	1	1	1	1	1	1		
15	1	119798-14030	CAMSHAFT ASSY	1	1	1	1	1	1		
16	1	119798-14040	CAMSHAFT ASSY	1	1	1	1	1	1		
17	2	119798-14140	BOLT, M6X16	1	1	1	1	1	1		
18	1	119798-14050	CHAIN ASSY	2	2	2	2	2	2		
19	1	119798-14060	GEAR, PUMP	1	1	1	1	1	1		
20	1	119798-14070	SPROCKET	1	1	1	1	1	1		
21	1	119798-14080	SPROCKET	1	1	1	1	1	1		
22	1	119798-14090	TENSIONER	2	2	2	2	2	2		
23	1	119798-14100	SLIPPER, CHAIN	2	2	2	2	2	2		
24	1	119798-14110	DAMPER	2	2	2	2	2	2		
25	1	119798-14120	GEAR, PUMP	1	1	1	1	1	1		
26	1	119798-14130	GEAR, PUMP	1	1	1	1	1	1		
27	1	119798-14150	BOLT, M8X25	4	4	4	4	4	4		
28	1	119798-14150	BOLT, M8X25	4	4	4	4	4	4		
29	1	119798-14160	BOLT, M8X20	4	4	4	4	4	4		
30	1	119798-14170	BOLT, M8X30	4	4	4	4	4	4		
31	1	119798-14180	NUT, M14	1	1	1	1	1	1		
32	1	119798-14190	PLUG, HOLE	1	1	1	1	1	1		
33	1	119798-39410	PIPE, CAMSHAFT	1	1	1	1	1	1		
34	1	119798-39420	PIPE, CAMSHAFT	1	1	1	1	1	1		
35	1	119798-39430	PIPE, CAMSHAFT	1	1	1	1	1	1		
36	1	119798-39440	PIPE, CAMSHAFT	1	1	1	1	1	1		
37	1	119798-39450	BOLT, M8X19	4	4	4	4	4	4		
38	1	119770-90540	BEARING, BALL	1	1	1	1	1	1		

N:Old $\overset{\text{Yes}}{\underset{\text{No}}{\leftrightarrow}}$ New, Q:Old $\overset{\text{No}}{\underset{\text{Yes}}{\leftrightarrow}}$ New, R:Old $\overset{\text{Yes}}{\underset{\text{Yes}}{\leftrightarrow}}$ New, S:Old $\overset{\text{No}}{\underset{\text{No}}{\leftrightarrow}}$ New, W:Add, Z:Discontinued, F:Interchangeable by set, K:Q'ty Change

Copyright (C) YANMAR CO., LTD. All RightsReserved.

Fig.23. CRANKSHAFT & PISTON

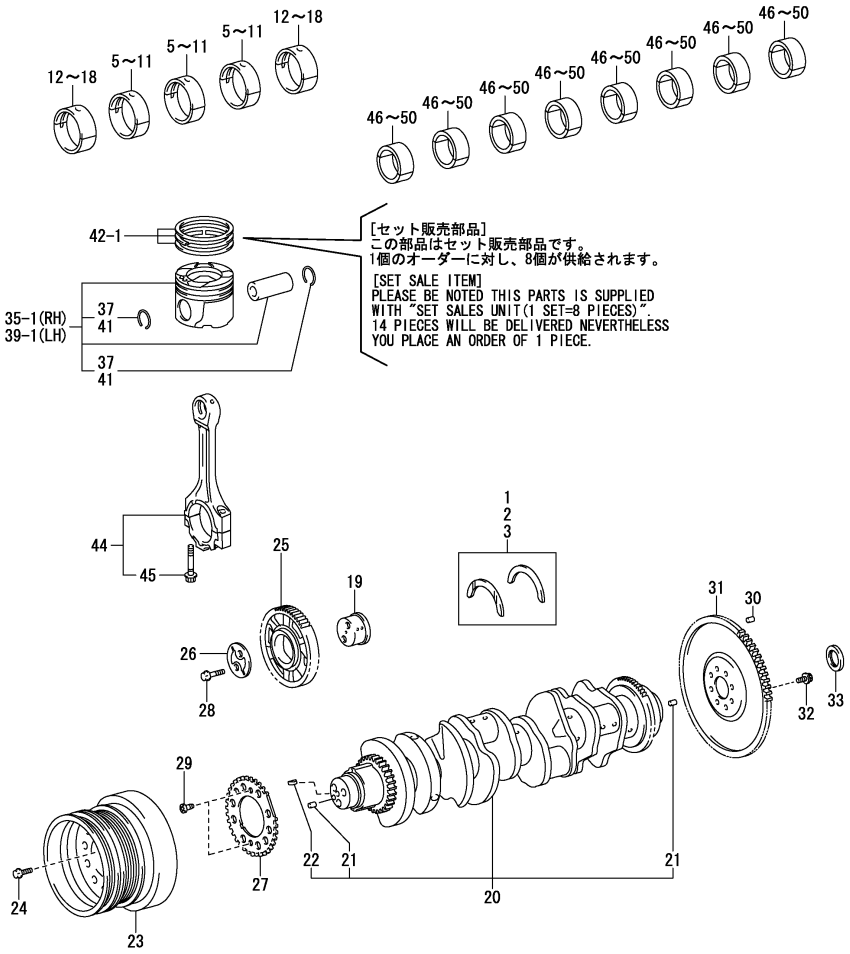

No.	Lev.	Parts No.	Description	Q'ty (A)	(B)	(C)	(D)	(E)	(F)	I	R
1	1	119798-02110	WASHER, STD	1	1	1	1	1	1		
2	1	119798-02120	WASHER, 0.125 OS	1	1	1	1	1	1		1
3	1	119798-02130	WASHER, 0.25 OS	1	1	1	1	1	1		2
5	1	119798-02150	METAL, MAIN MK1 2	3	3	3	3	3	3		3
6	1	119798-02160	METAL, MAIN MK2 2	3	3	3	3	3	3		3
7	1	119798-02170	METAL, MAIN MK3 2	3	3	3	3	3	3		3
8	1	119798-02180	METAL, MAIN MK4 2	3	3	3	3	3	3		3
9	1	119798-02190	METAL, MAIN MK5 2	3	3	3	3	3	3		3
10	1	119798-02200	METAL, MAIN MK6 2	3	3	3	3	3	3		3
11	1	119798-02210	METAL, MAIN MK7 2	3	3	3	3	3	3		3
12	1	119798-02220	METAL, MAIN MK1 1	2	2	2	2	2	2		3
13	1	119798-02230	METAL, MAIN MK2 1	2	2	2	2	2	2		3
14	1	119798-02240	METAL, MAIN MK3 1	2	2	2	2	2	2		3
15	1	119798-02250	METAL, MAIN MK4 1	2	2	2	2	2	2		3
16	1	119798-02260	METAL, MAIN MK5 1	2	2	2	2	2	2		3
17	1	119798-02270	METAL, MAIN MK6 1	2	2	2	2	2	2		3
18	1	119798-02280	METAL, MAIN MK7 1	2	2	2	2	2	2		3
19	1	119771-00151	SHAFT	1	1	1	1	1	1		
20	1	119798-21010	CRANKSHAFT	1	1	1	1	1	1		
21	2	119798-21020	PIN, STRAIGHT D8XL15	2	2	2	2	2	2		
22	2	119770-90440	KEY	1	1	1	1	1	1		
23	1	119798-21030	PULLEY, CRANKSHAFT	1	1	1	1	1	1		
24	1	119798-21040	BOLT, M12X45	3	3	3	3	3	3		
25	1	119798-21050	GEAR	1	1	1	1	1	1		
26	1	119798-21060	PLATE	1	1	1	1	1	1		
27	1	119798-21080	PLATE	1	1	1	1	1	1		
28	1	119798-21090	BOLT, M10X50	2	2	2	2	2	2		
29	1	119798-21100	BOLT, M6X9	2	2	2	2	2	2		
30	1	119798-01050	PIN, STRAIGHT L22D10	2	2	2	2	2	2		
31	1	119798-21210	FLYWHEEL ASSY	1	1	1	1	1	1		
32	1	119798-21220	BOLT, M14X30	8	8	8	8	8	8		
33	1	119798-21230	BEARING, BALL	1	1	1	1	1	1		
35-1	1	119798-22010	PISTON ASSY	4	4	4	4	4	4		4
37	3	119798-22030	RING, HOLE SNAP	8	8	8	8	8	8		4
39-1	1	119798-22020	PISTON ASSY	4	4	4	4	4	4		5
41	3	119798-22030	RING, HOLE SNAP	8	8	8	8	8	8		5
42-1	1	119798-22100	RING SET, PISTON	1	1	1	1	1	1		
44	1	119798-23100	ROD ASSY, CONNECTING	8	8	8	8	8	8		
45	2	119798-23200	BOLT, ROD	16	16	16	16	16	16		
46	1	119798-23110	METAL, ROD MK1	8	8	8	8	8	8		3
47	1	119798-23120	METAL, ROD MK2	8	8	8	8	8	8		3
48	1	119798-23130	METAL, ROD MK3	8	8	8	8	8	8		3
49	1	119798-23140	METAL, ROD MK4	8	8	8	8	8	8		3
50	1	119798-23150	METAL, ROD MK5	8	8	8	8	8	8		3

(A)=8LV320 (D)=8LV320Z
(B)=8LV350 (E)=8LV350Z
(C)=8LV370 (F)=8LV370Z

Remarks
(1)Over sized(O.S.=0.125)parts.
(2)Over sized(O.S.=0.250)parts.
(3)Please refer to the introduction
for the combination of how to choose.
(4)For the right head.
(5)For the left head.

N:Old ◄Yes/No► New, Q:Old ◄No/Yes► New, R:Old ◄Yes/Yes► New, S:Old ◄No/No► New, W:Add, Z:Discontinued, F:Interchangeable by set, K:Q'ty Change

Copyright (C) YANMAR CO., LTD. All RightsReserved.

Fig.24. LUB.OIL COOLER

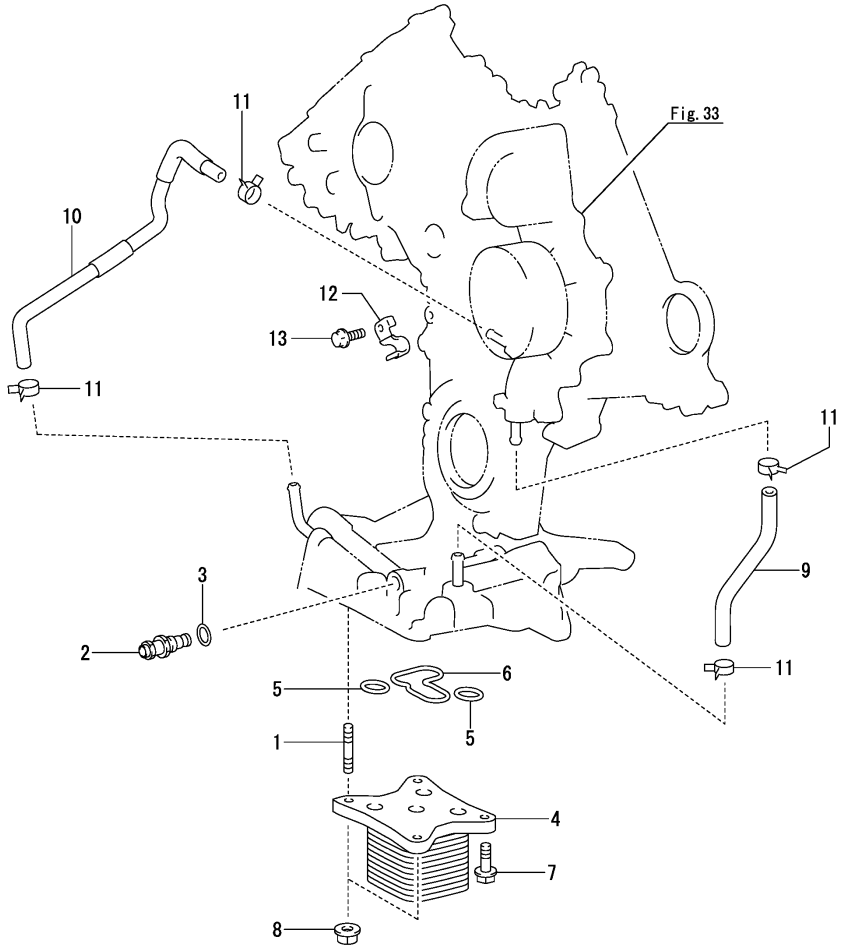

(A)=8LV320 (B)=8LV350 (C)=8LV370 (D)=8LV320Z (E)=8LV350Z (F)=8LV370Z

No.	Lev.	Parts No.	Description	Q'ty (A)	(B)	(C)	(D)	(E)	(F)	I	R
1	1	119798-33060	STUD	2	2	2	2	2	2		
2	1	119798-33080	VALVE ASSY, RELIEF	1	1	1	1	1	1		
3	1	119798-33090	GASKET, VALVE	1	1	1	1	1	1		
4	1	119798-33100	COOLER ASSY, OIL	1	1	1	1	1	1		
5	1	119798-33110	GASKET	2	2	2	2	2	2		
6	1	119798-33120	GASKET	1	1	1	1	1	1		
7	1	119798-33130	BOLT, M8X30	2	2	2	2	2	2		
8	1	119798-33140	NUT, M8	2	2	2	2	2	2		
9	1	119798-49810	HOSE	1	1	1	1	1	1		
10	1	119798-49820	HOSE	1	1	1	1	1	1		
11	1	119798-49830	CLIP, HOSE	4	4	4	4	4	4		
12	1	119798-49850	CLAMP	1	1	1	1	1	1		
13	1	119798-49860	BOLT, M6X14	1	1	1	1	1	1		

N:Old ◄Yes/No► New, Q:Old ◄No/Yes► New, R:Old ◄Yes/Yes► New, S:Old ◄No/No► New, W:Add, Z:Discontinued, F:Interchangeable by set, K:Q'ty Change

Copyright (C) YANMAR CO., LTD. All RightsReserved.

Fig.25. LUB.OIL COOLER COVER

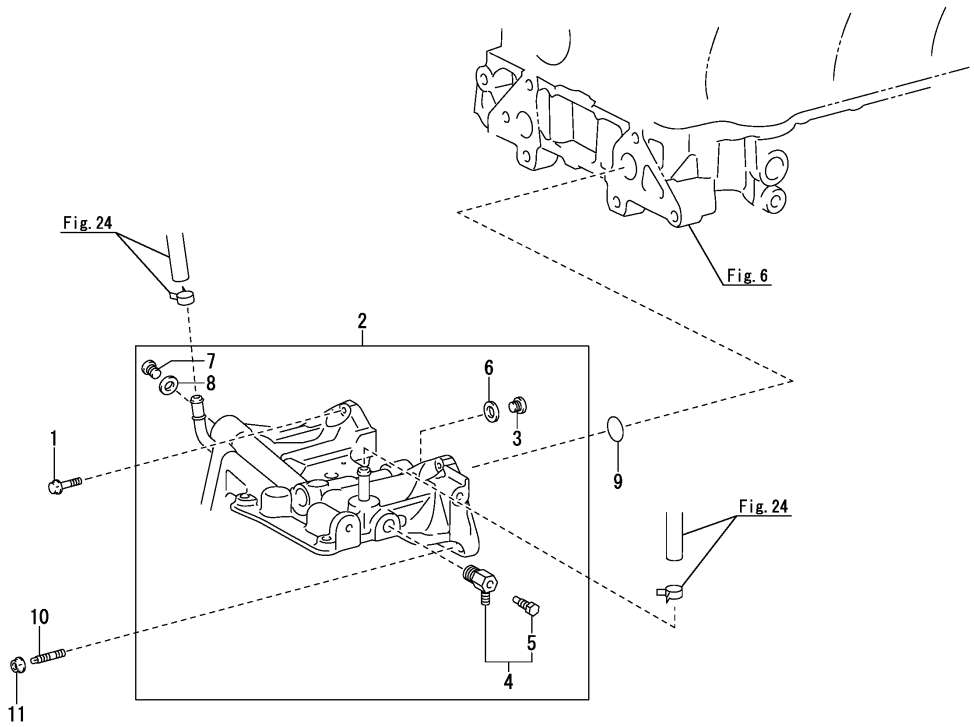

(A)=8LV320 (B)=8LV350 (C)=8LV370 (D)=8LV320Z (E)=8LV350Z (F)=8LV370Z

No.	Lev.	Parts No.	Description	Q'ty (A)	(B)	(C)	(D)	(E)	(F)	I	R
1	1	119798-14150	BOLT, M8X25	3	3	3	3	3	3		
2	1	119798-33010	BRACKET ASSY	1	1	1	1	1	1		
3	2	119798-33020	PLUG	1	1	1	1	1	1		
4	2	119798-33040	COCK	1	1	1	1	1	1		
5	3	119798-33050	PLUG, COCK	1	1	1	1	1	1		
6	2	119770-90690	GASKET	1	1	1	1	1	1		
7	2	119770-90970	PLUG	1	1	1	1	1	1		
8	2	119770-90980	GASKET	1	1	1	1	1	1		
9	1	119798-33030	O-RING	1	1	1	1	1	1		
10	1	119798-33060	STUD	2	2	2	2	2	2		
11	1	119798-33070	NUT, M8	2	2	2	2	2	2		

N:Old $\xleftrightarrow[\text{No}]{\text{Yes}}$ New, Q:Old $\xleftrightarrow[\text{Yes}]{\text{No}}$ New, R:Old $\xleftrightarrow[\text{Yes}]{\text{Yes}}$ New, S:Old $\xleftrightarrow[\text{No}]{\text{No}}$ New, W:Add, Z:Discontinued, F:Interchangeable by set, K:Q'ty Change

Copyright (C) YANMAR CO., LTD. All RightsReserved.

Fig.26. LUB.OIL DIPSTICK

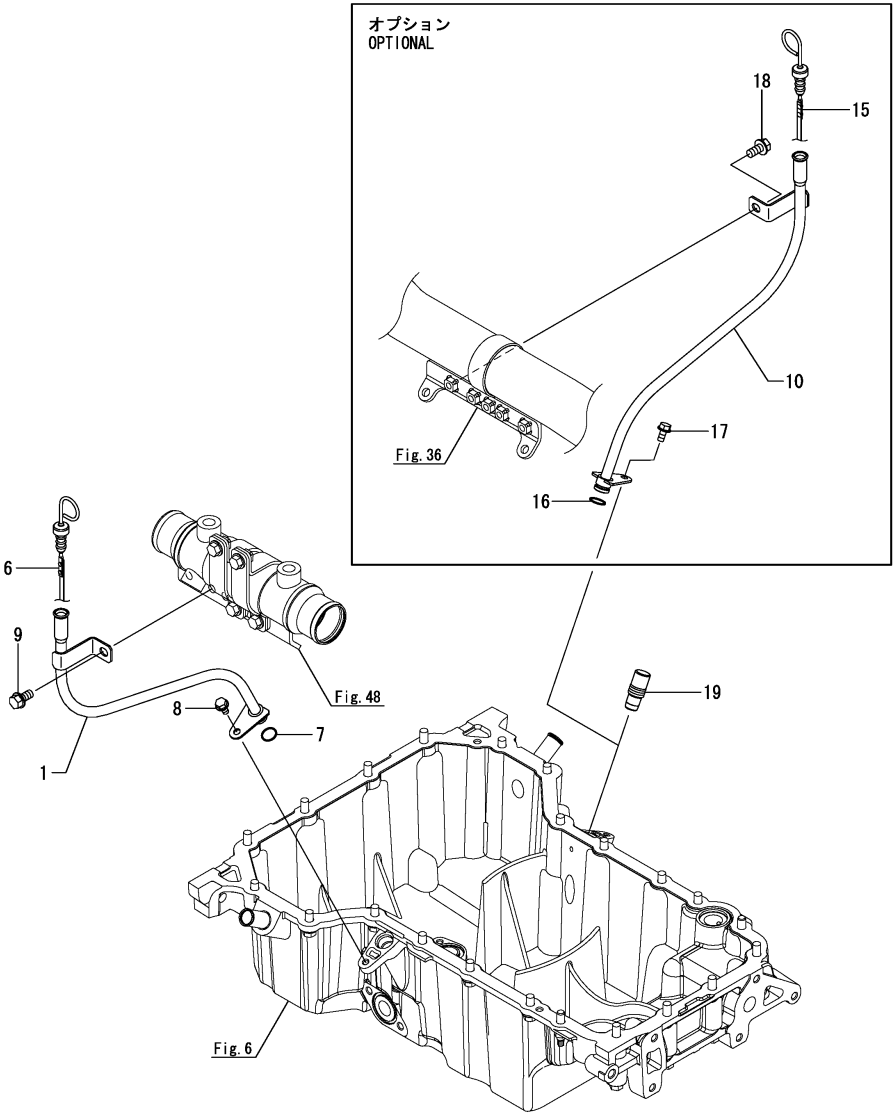

(A)=8LV320 (B)=8LV350 (C)=8LV370 (D)=8LV320Z (E)=8LV350Z (F)=8LV370Z

No.	Lev.	Parts No.	Description	Q'ty (A)	(B)	(C)	(D)	(E)	(F)	I	R
1	1	119798-34100	GUIDE ASSY, DIPSTICK	1	1	1	1	1	1		
6	1	119798-34800	DIPSTICK, OIL	1	1	1	1	1	1		
7	1	24356-190130	O-RING, 4D19013	1	1	1	1	1	1		
8	1	26106-060122	BOLT, M6X 12 PLATED	1	1	1	1	1	1		
9	1	26106-080162	BOLT, M8X 16 PLATED	1	1	1	1	1	1		
10	1	119798-34100	GUIDE ASSY, DIPSTICK	1	1	1	1	1	1		1
15	1	119798-34800	DIPSTICK, OIL	1	1	1	1	1	1		1
16	1	24356-190130	O-RING, 4D19013	1	1	1	1	1	1		1
17	1	26106-060122	BOLT, M6X 12 PLATED	1	1	1	1	1	1		1
18	1	26106-080162	BOLT, M8X 16 PLATED	1	1	1	1	1	1		1
19	1	119798-34450	CAP	1	1	1	1	1	1		

Remarks
(1)Optional parts.

N:Old $\xleftrightarrow[\text{No}]{\text{Yes}}$ New, Q:Old $\xleftrightarrow[\text{Yes}]{\text{No}}$ New, R:Old $\xleftrightarrow[\text{Yes}]{\text{Yes}}$ New, S:Old $\xleftrightarrow[\text{No}]{\text{No}}$ New, W:Add, Z:Discontinued, F:Interchangeable by set, K:Q'ty Change

Copyright (C) YANMAR CO., LTD. All RightsReserved.

Fig.27. LUB.OIL STRAINER

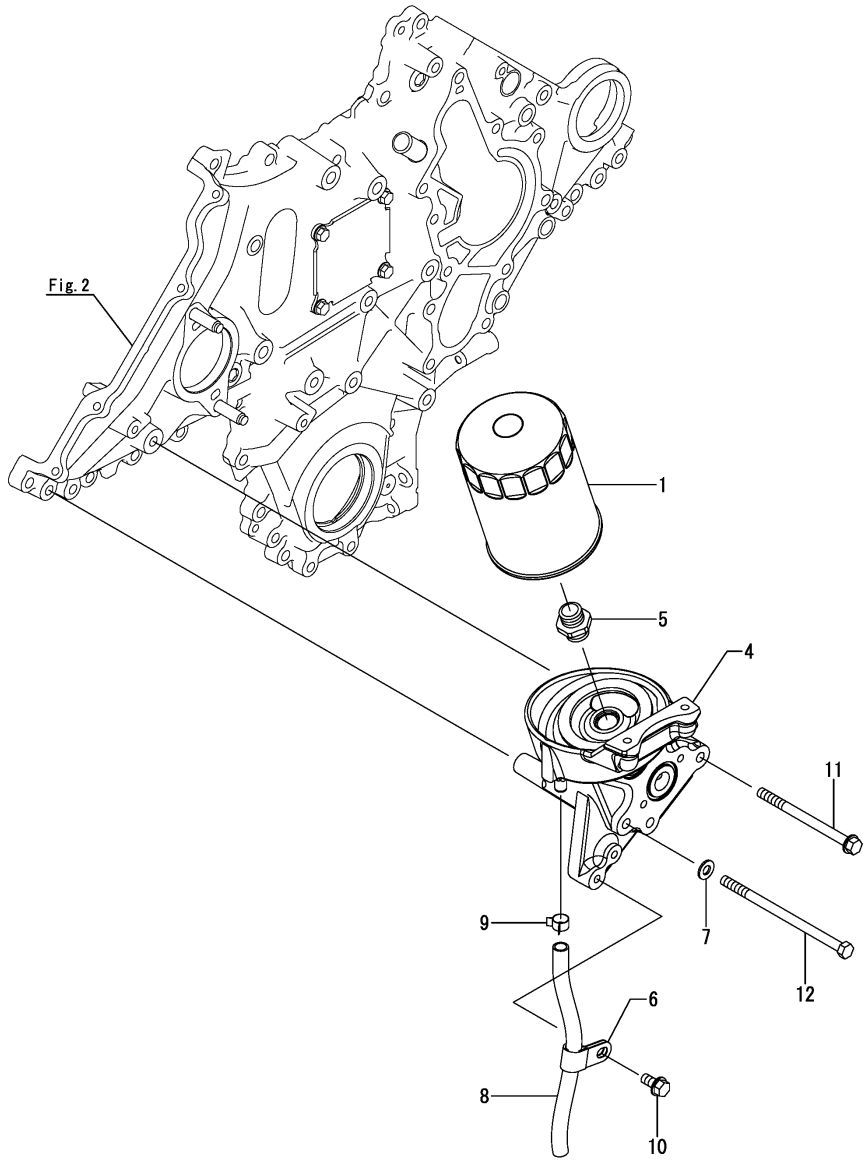

(A)=8LV320 (D)=8LV320Z
(B)=8LV350 (E)=8LV350Z
(C)=8LV370 (F)=8LV370Z

No.	Lev.	Parts No.	Description	Q'ty (A)	(B)	(C)	(D)	(E)	(F)	I	R
1	1	119798-35110	FILTER ASSY, OIL	1	1	1	1	1	1		
4	1	119798-35300	BRACKET	1	1	1	1	1	1		
5	1	119798-35310	UNION	1	1	1	1	1	1		
6	1	119593-39450	RETAINER	1	1	1	1	1	1		
7	1	22137-080000	WASHER, 8	2	2	2	2	2	2		
8	1	23064-100200	PIPE, 10X 200	1	1	1	1	1	1		
9	1	23080-013000	CLAMP, 13	1	1	1	1	1	1		
10	1	26106-080162	BOLT, M8X 16 PLATED	1	1	1	1	1	1		
11	1	26106-081052	BOLT, M8X105 PLATED	1	1	1	1	1	1		
12	1	26116-081402	BOLT, M8X140 PLATED	2	2	2	2	2	2		

N:Old $\frac{\text{Yes}}{\text{No}}$ New, Q:Old $\frac{\text{No}}{\text{Yes}}$ New, R:Old $\frac{\text{Yes}}{\text{Yes}}$ New, S:Old $\frac{\text{No}}{\text{No}}$ New, W:Add, Z:Discontinued, F:Interchangeable by set, K:Q'ty Change

Copyright (C) YANMAR CO., LTD. All RightsReserved.

Fig.28. LUB.OIL PIPE(FILTER)

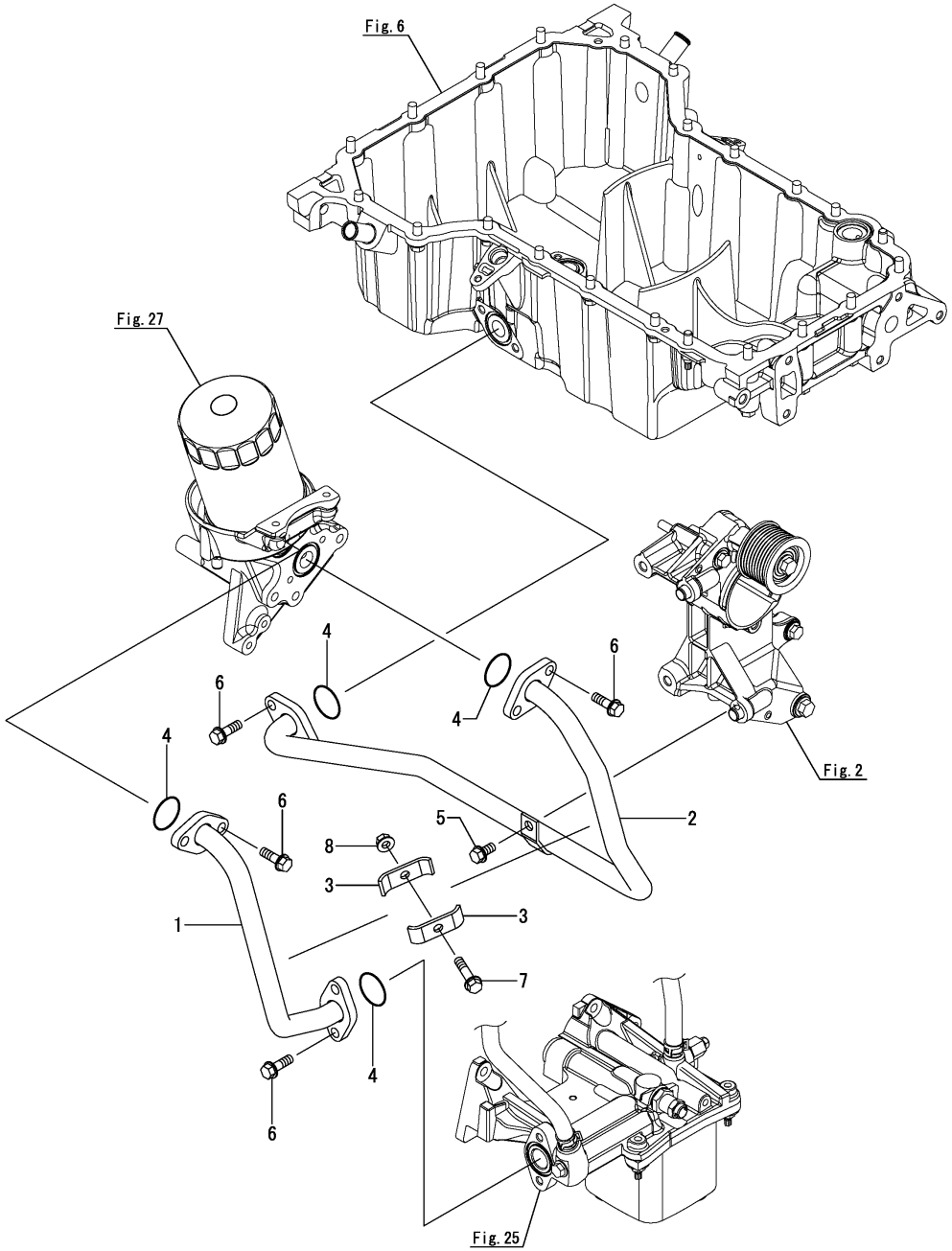

(A)=8LV320 (D)=8LV320Z
(B)=8LV350 (E)=8LV350Z
(C)=8LV370 (F)=8LV370Z

No.	Lev.	Parts No.	Description	Q'ty (A)	(B)	(C)	(D)	(E)	(F)	I	R
1	1	119798-39060	PIPE ASSY, OIL	1	1	1	1	1	1		
2	1	119798-39070	PIPE ASSY, OIL	1	1	1	1	1	1		
3	1	119593-39080	RETAINER, PIPE	2	2	2	2	2	2		
4	1	24356-240310	O-RING, 4D24031	4	4	4	4	4	4		
5	1	26106-080162	BOLT, M8X 16 PLATED	1	1	1	1	1	1		
6	1	26106-080252	BOLT, M8X 25 PLATED	8	8	8	8	8	8		
7	1	26106-080352	BOLT, M8X 35 PLATED	1	1	1	1	1	1		
8	1	26366-080002	NUT, M8	1	1	1	1	1	1		

N:Old $\overset{\text{Yes}}{\underset{\text{No}}{\leftrightarrow}}$ New, Q:Old $\overset{\text{No}}{\underset{\text{Yes}}{\leftrightarrow}}$ New, R:Old $\overset{\text{Yes}}{\underset{\text{Yes}}{\leftrightarrow}}$ New, S:Old $\overset{\text{No}}{\underset{\text{No}}{\leftrightarrow}}$ New, W:Add, Z:Discontinued, F:Interchangeable by set, K:Q'ty Change

Copyright (C) YANMAR CO., LTD. All RightsReserved.

Fig.29. LUB.OIL PIPE(TURBOCHARGER)

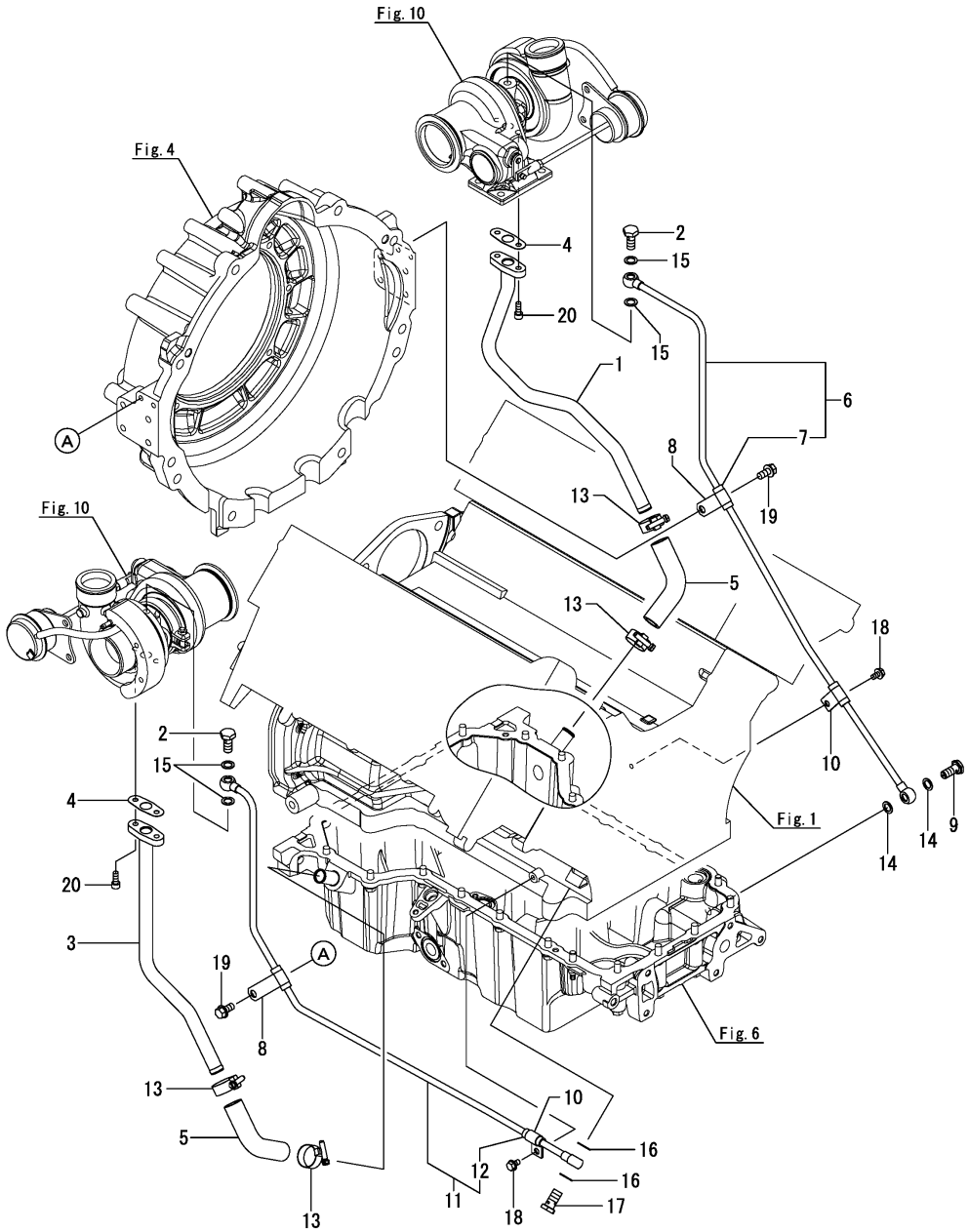

(A)=8LV320 (D)=8LV320Z
(B)=8LV350 (E)=8LV350Z
(C)=8LV370 (F)=8LV370Z

No.	Lev.	Parts No.	Description	Q'ty (A)	(B)	(C)	(D)	(E)	(F)	I	R
1	1	119798-39120	PIPE ASSY, OIL	1	1	1	1	1	1		
2	1	119798-39130	BOLT, JOINT	2	2	2	2	2	2		
3	1	119798-39160	PIPE ASSY, OIL	1	1	1	1	1	1		
4	1	119798-39200	GASKET	2	2	2	2	2	2		
5	1	119798-39220	HOSE, OIL RETURN	2	2	2	2	2	2		
6	1	119798-39300	PIPE ASSY, OIL	1	1	1	1	1	1		
7	2	119798-39340	PROTECTOR, NOZZLE	2	2	2	2	2	2		
8	1	119798-39320	BRACKET	2	2	2	2	2	2		
9	1	148688-39320	BOLT,BALL JOINT	1	1	1	1	1	1		
10	1	119798-39330	BRACKET	2	2	2	2	2	2		
11	1	119798-39350	PIPE ASSY, OIL	1	1	1	1	1	1		
12	2	119798-39340	PROTECTOR, NOZZLE	2	2	2	2	2	2		
13	1	23000-028000	CLAMP, 28	4	4	4	4	4	4		
14	1	23414-100000	GASKET, 10X1.0	2	2	2	2	2	2		
15	1	23414-100000	GASKET, 10X1.0	4	4	4	4	4	4		
16	1	23414-120000	GASKET, 12X1.0	2	2	2	2	2	2		
17	1	23857-060000	BOLT, JOINT 6	1	1	1	1	1	1		
18	1	26106-060102	BOLT, M6X 10 PLATED	2	2	2	2	2	2		
19	1	26106-080162	BOLT, M8X 16 PLATED	2	2	2	2	2	2		
20	1	26450-060162	BOLT, M6X 16	4	4	4	4	4	4		

N:Old $\xleftarrow[\text{No}]{\text{Yes}}$ New, Q:Old $\xleftarrow[\text{Yes}]{\text{No}}$ New, R:Old $\xleftarrow[\text{Yes}]{\text{Yes}}$ New, S:Old $\xleftarrow[\text{No}]{\text{No}}$ New, W:Add, Z:Discontinued, F:Interchangeable by set, K:Q'ty Change

Copyright (C) YANMAR CO., LTD. All RightsReserved.

Fig.30. OIL SUCTION/DRAIN PUMP(OPTIONAL)

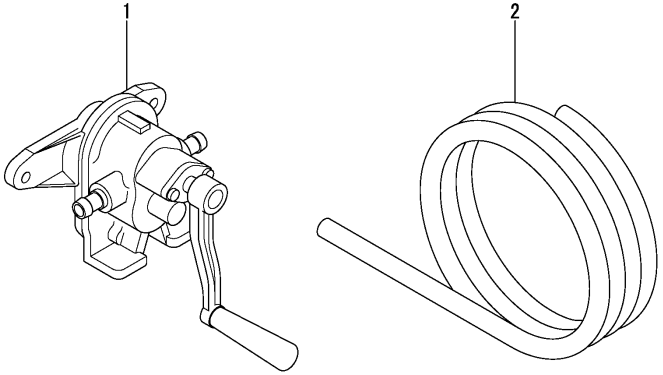

(A)=8LV320 (D)=8LV320Z
(B)=8LV350 (E)=8LV350Z
(C)=8LV370 (F)=8LV370Z

No.	Lev.	Parts No.	Description	Q'ty (A)	(B)	(C)	(D)	(E)	(F)	I	R
1	1	124413-39100	PUMP ASSY, WASTE	1	1	1	1	1	1		
2	1	120130-39990	HOSE,OIL DRAIN 3M	1	1	1	1	1	1		

N:Old ◄Yes/No► New, Q:Old ◄No/Yes► New, R:Old ◄Yes/Yes► New, S:Old ◄No/No► New, W:Add, Z:Discontinued, F:Interchangeable by set, K:Q'ty Change

Copyright (C) YANMAR CO., LTD. All RightsReserved.

Fig.31. BILGE PUMP(OPTIONAL)

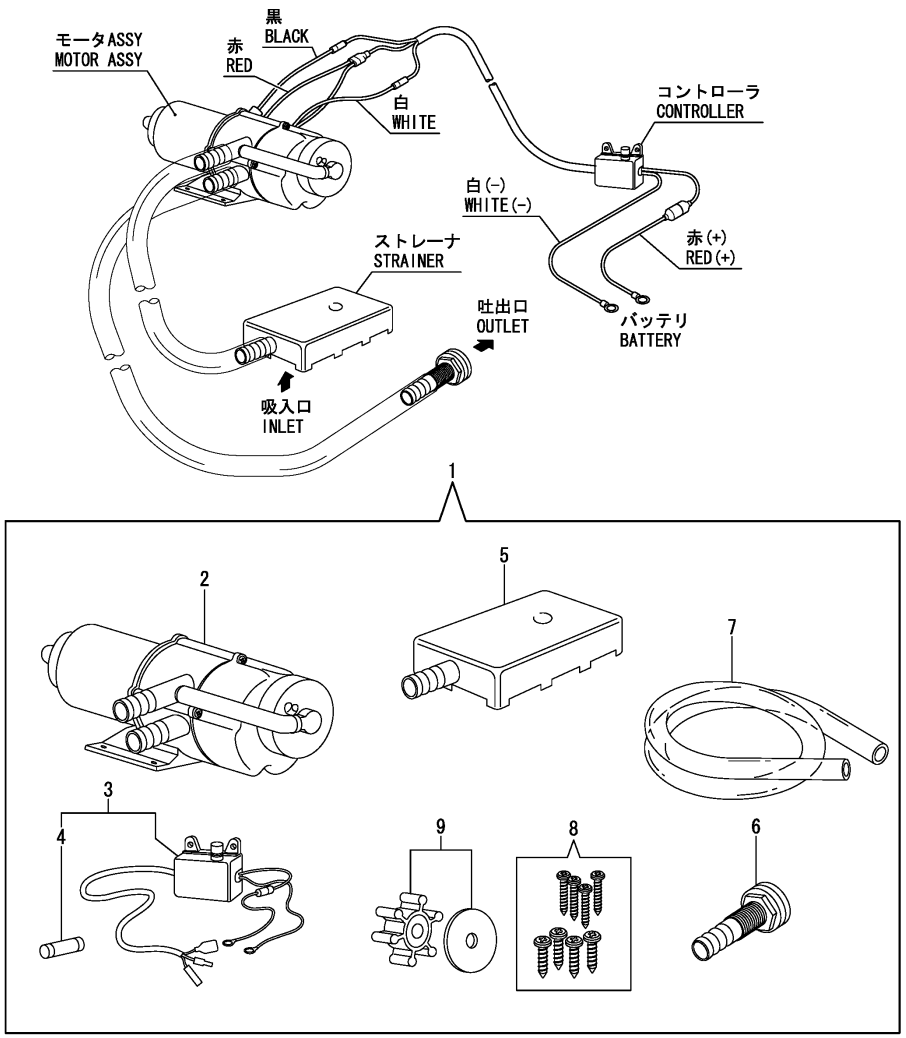

(A)=8LV320 (D)=8LV320Z
(B)=8LV350 (E)=8LV350Z
(C)=8LV370 (F)=8LV370Z

No.	Lev.	Parts No.	Description	Q'ty (A)	(B)	(C)	(D)	(E)	(F)	I	R
1	1	977780-01211	PUMP,BILGE (12V	1	1	1	1	1	1		
2	2	X0318101004	MOTOR ASSY, BILGE	1	1	1	1	1	1		
3	2	X158606410X	SWITH	1	1	1	1	1	1		
4	3	X8636015001	FUSE	1	1	1	1	1	1		
5	2	X179100022X	STRAINER	1	1	1	1	1	1		
6	2	X179100100X	PIPE ASSY	1	1	1	1	1	1		
7	2	X0044021509	HOSE A	1	1	1	1	1	1		
8	2	X199906101X	SCREW SET	1	1	1	1	1	1		
9	2	977780-03000	INPELLER	1	1	1	1	1	1		

N:Old $\xleftrightarrow[\text{No}]{\text{Yes}}$ New, Q:Old $\xleftrightarrow[\text{Yes}]{\text{No}}$ New, R:Old $\xleftrightarrow[\text{Yes}]{\text{Yes}}$ New, S:Old $\xleftrightarrow[\text{No}]{\text{No}}$ New, W:Add, Z:Discontinued, F:Interchangeable by set, K:Q'ty Change

Copyright (C) YANMAR CO., LTD. All RightsReserved.

Fig.32. COOLING SEA WATER PUMP

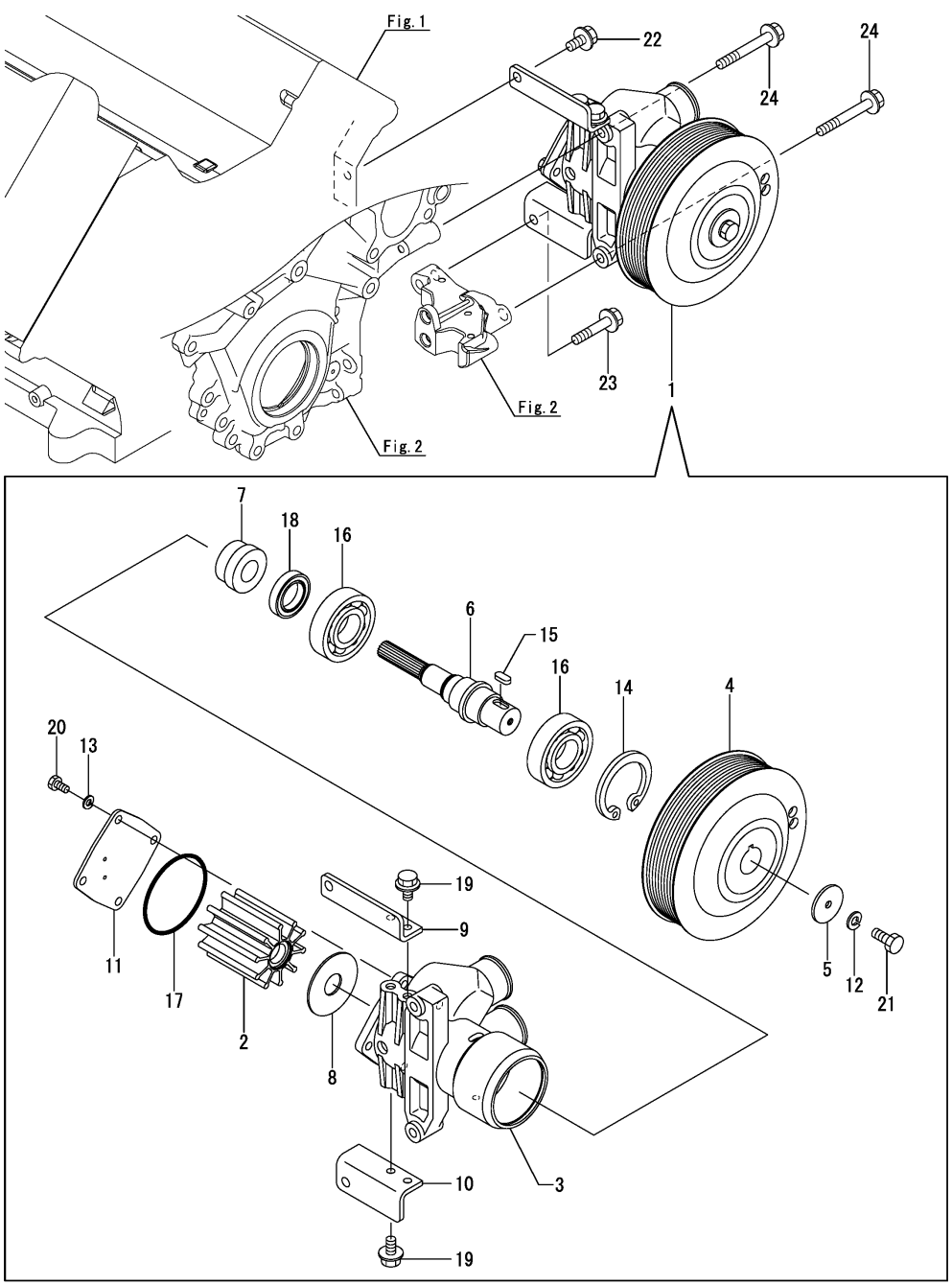

(A)=8LV320 (B)=8LV350 (C)=8LV370 (D)=8LV320Z (E)=8LV350Z (F)=8LV370Z

No.	Lev.	Parts No.	Description	Q'ty (A)	(B)	(C)	(D)	(E)	(F)	I	R
1	1	119798-42200	PUMP ASSY, WATER	1	1	1	1	1	1		
2	2	119593-42202	IMPELLER	1	1	1	1	1	1		
3	2	119798-42210	BODY,CSW PUMP	1	1	1	1	1	1		
4	2	119798-42260	PULLEY	1	1	1	1	1	1		
5	2	119798-42270	WASHER	1	1	1	1	1	1		
6	2	119798-42310	SHAFT	1	1	1	1	1	1		
7	2	119798-42330	SEAL, MECHANICAL	1	1	1	1	1	1		
8	2	119798-42340	PLATE,WARE	1	1	1	1	1	1		
9	2	119798-42350	BRACKET,A	1	1	1	1	1	1		
10	2	119798-42360	BRACKET,B	1	1	1	1	1	1		
11	2	119171-42530	COVER	1	1	1	1	1	1		
12	2	22212-080000	WASHER 8	1	1	1	1	1	1		
13	2	22213-060000	WASHER, SPRING 6	4	4	4	4	4	4		
14	2	22252-000620	RING, 62	1	1	1	1	1	1		
15	2	22512-070160	KEY, 7X 16	1	1	1	1	1	1		
16	2	24104-062064	BEARING, BALL 6206UU	2	2	2	2	2	2		
17	2	24321-000700	O-RING, 1AG70.0	1	1	1	1	1	1		
18	2	24421-254008	SEAL, OIL TC254008	1	1	1	1	1	1		
19	2	26106-080142	BOLT, M8X 14 PLATED	4	4	4	4	4	4		
20	2	26113-060122	BOLT, M6X 12	4	4	4	4	4	4		
21	2	26113-080202	BOLT M8X 20 (STEN	1	1	1	1	1	1		
22	1	26106-080162	BOLT, M8X 16 PLATED	1	1	1	1	1	1		
23	1	26106-080402	BOLT, M8X 40 PLATED	1	1	1	1	1	1		
24	1	26106-080602	BOLT, M8X 60 PLATED	2	2	2	2	2	2		

N:Old $\frac{\text{Yes}}{\text{No}}$ New, Q:Old $\frac{\text{No}}{\text{Yes}}$ New, R:Old $\frac{\text{Yes}}{\text{Yes}}$ New, S:Old $\frac{\text{No}}{\text{No}}$ New, W:Add, Z:Discontinued, F:Interchangeable by set, K:Q'ty Change

Copyright (C) YANMAR CO., LTD. All RightsReserved.

Fig.33. COOLING FRESH WATER PUMP

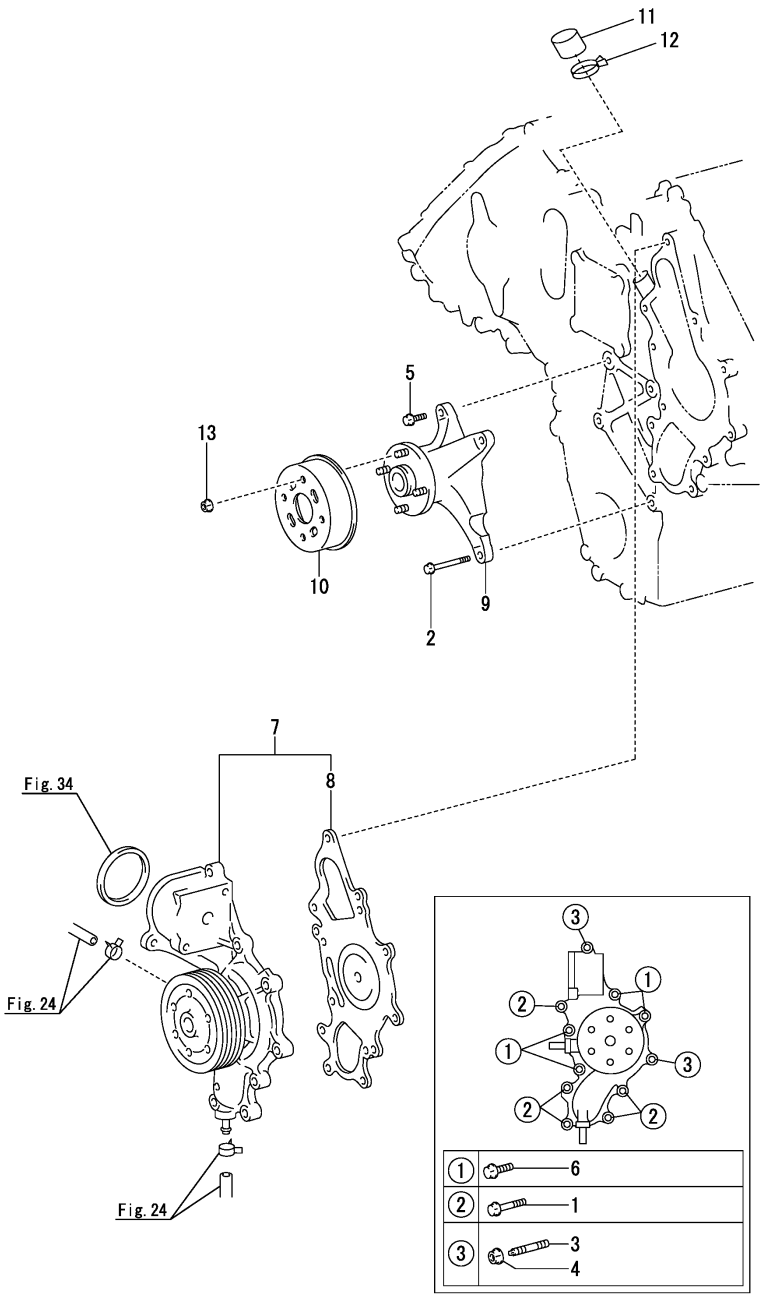

(A)=8LV320 (B)=8LV350 (C)=8LV370 (D)=8LV320Z (E)=8LV350Z (F)=8LV370Z

No.	Lev.	Parts No.	Description	Q'ty (A)	(B)	(C)	(D)	(E)	(F)	I	R
1	1	119798-01700	BOLT, FLANGE M8X80	5	5	5	5	5	5		
2	1	119798-01700	BOLT, FLANGE M8X80	1	1	1	1	1	1		
3	1	119798-01770	STUD, 8X42	2	2	2	2	2	2		
4	1	119798-01800	NUT, M8	2	2	2	2	2	2		
5	1	119798-14170	BOLT, M8X30	3	3	3	3	3	3		
6	1	119798-14170	BOLT, M8X30	4	4	4	4	4	4		
7	1	119798-42010	PUMP ASSY, WATER	1	1	1	1	1	1		
8	2	119798-42020	GASKET	1	1	1	1	1	1		
9	1	119798-42030	BRACKET ASSY	1	1	1	1	1	1		
10	1	119798-42040	PULLEY	1	1	1	1	1	1		
11	1	119798-42050	PLUG	1	1	1	1	1	1		
12	1	119798-42060	CLIP, HOSE	1	1	1	1	1	1		
13	1	119798-42070	NUT, M8	4	4	4	4	4	4		

N:Old $\xleftarrow[\text{No}]{\text{Yes}}$ New, Q:Old $\xleftarrow[\text{Yes}]{\text{No}}$ New, R:Old $\xleftarrow[\text{Yes}]{\text{Yes}}$ New, S:Old $\xleftarrow[\text{No}]{\text{No}}$ New, W:Add, Z:Discontinued, F:Interchangeable by set, K:Q'ty Change

Copyright (C) YANMAR CO., LTD. All RightsReserved.

Fig.34. THERMOSTAT

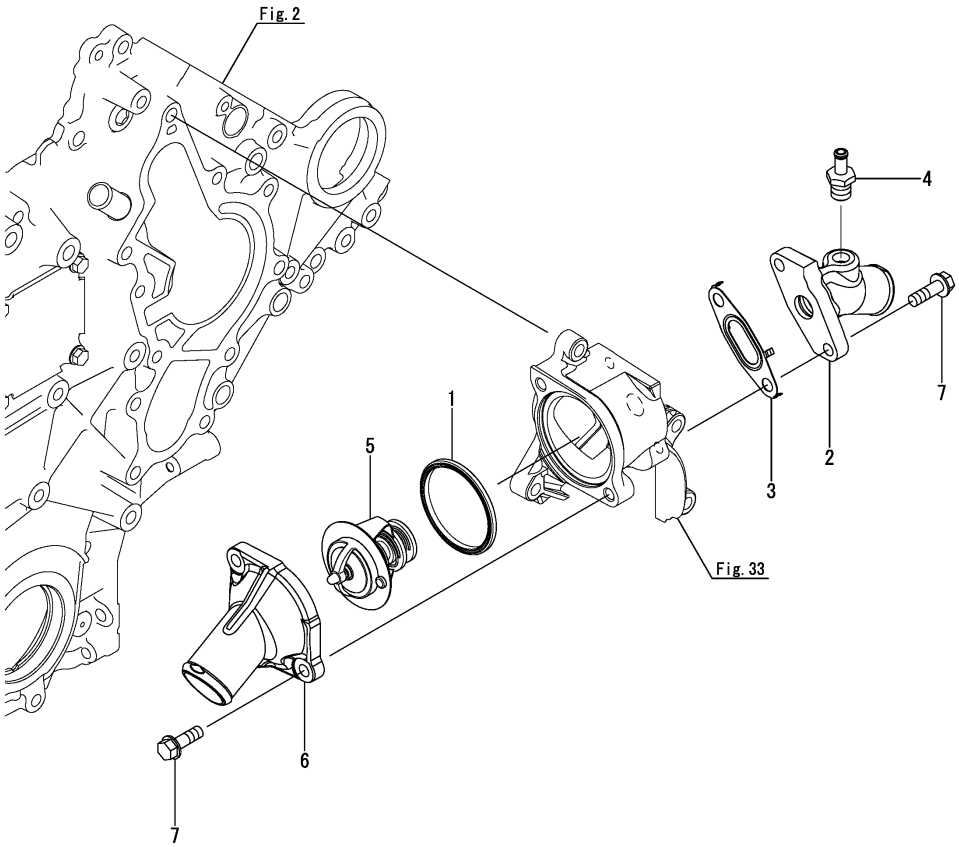

(A)=8LV320 (B)=8LV350 (C)=8LV370 (D)=8LV320Z (E)=8LV350Z (F)=8LV370Z

No.	Lev.	Parts No.	Description	Q'ty (A)	(B)	(C)	(D)	(E)	(F)	I	R
1	1	119798-48360	GASKET	1	1	1	1	1	1		
2	1	119798-48520	JOINT	1	1	1	1	1	1		
3	1	119798-48540	GASKET	1	1	1	1	1	1		
4	1	121550-49111	JOINT, PT1/4	1	1	1	1	1	1		
5	1	119773-49550	THERMOSTAT	1	1	1	1	1	1		
6	1	119798-49910	COVER, THERMOSTAT	1	1	1	1	1	1		
7	1	26106-080252	BOLT, M8X 25 PLATED	4	4	4	4	4	4		

N:Old $\xleftrightarrow[\text{No}]{\text{Yes}}$ New, Q:Old $\xleftrightarrow[\text{Yes}]{\text{No}}$ New, R:Old $\xleftrightarrow[\text{Yes}]{\text{Yes}}$ New, S:Old $\xleftrightarrow[\text{No}]{\text{No}}$ New, W:Add, Z:Discontinued, F:Interchangeable by set, K:Q'ty Change

Copyright (C) YANMAR CO., LTD. All RightsReserved.

Fig.35. COOLING FRESH WATER COOLER

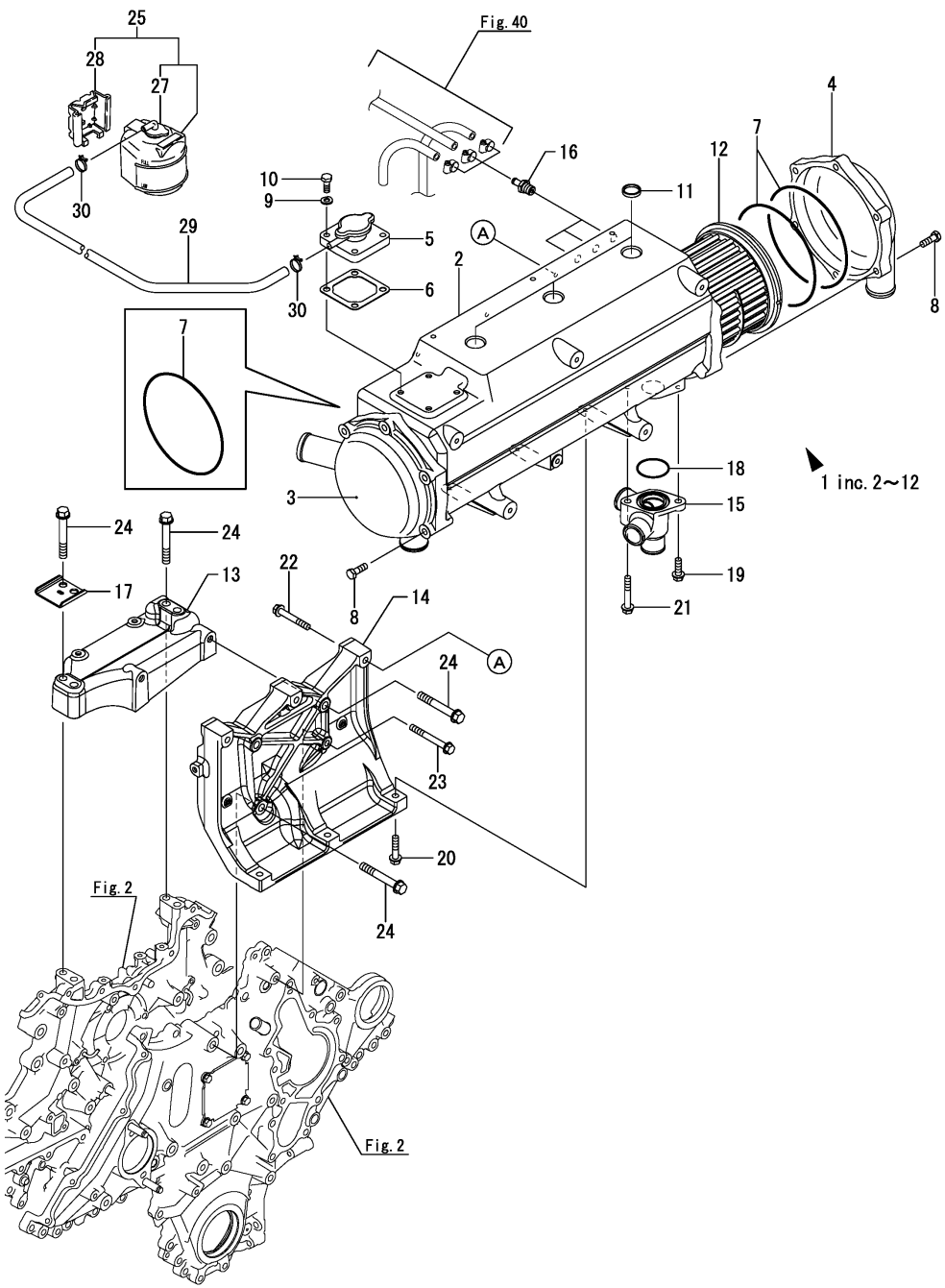

(A)=8LV320 (B)=8LV350 (C)=8LV370 (D)=8LV320Z (E)=8LV350Z (F)=8LV370Z

No.	Lev.	Parts No.	Description	Q'ty (A)	(B)	(C)	(D)	(E)	(F)	I	R
1	1	119798-44500	COOLER ASSY, WATER	1	1	1	1	1	1		
2	2	119798-44010	CASE, COOLER	1	1	1	1	1	1		
3	2	119798-44050	COVER	1	1	1	1	1	1		
4	2	119798-44060	COVER	1	1	1	1	1	1		
5	2	119798-44190	FILLER, WATER	1	1	1	1	1	1		
6	2	119798-44220	GASKET	1	1	1	1	1	1		
7	2	119798-44250	O-RING	3	3	3	3	3	3		
8	2	119798-44260	BOLT, M8X1.25X25	12	12	12	12	12	12		
9	2	119798-44270	WASHER, M8	4	4	4	4	4	4		
10	2	119798-44280	BOLT, M8X1.25X20	4	4	4	4	4	4		
11	2	119798-44290	PLUG	3	3	3	3	3	3		
12	2	119798-44400	CORE ASSY	1	1	1	1	1	1		
13	1	119798-44630	BRACKET	1	1	1	1	1	1		
14	1	119798-44640	BRACKET	1	1	1	1	1	1		
15	1	119798-48510	JOINT	1	1	1	1	1	1		
16	1	121550-49111	JOINT, PT1/4	3	3	3	3	3	3		
17	1	119798-59910	RETAINER, PIPE	1	1	1	1	1	1		
18	1	24321-000400	O-RING, 1AG40.0	1	1	1	1	1	1		
19	1	26106-080252	BOLT, M8X 25 PLATED	1	1	1	1	1	1		
20	1	26106-080352	BOLT, M8X 35 PLATED	3	3	3	3	3	3		
21	1	26106-080502	BOLT, M8X 50 PLATED	1	1	1	1	1	1		
22	1	26106-080552	BOLT, M8X 55 PLATED	3	3	3	3	3	3		
23	1	26106-080702	BOLT, M8X 70 PLATED	1	1	1	1	1	1		
24	1	26136-100702	BOLT, 10 X 70	7	7	7	7	7	7		
25	1	720445-44200	TANK ASSY, SUB	1	1	1	1	1	1		
27	3	X0225000630	CAP	1	1	1	1	1	1		
28	2	120445-44540	SUPPORT	1	1	1	1	1	1		
29	1	124790-44560	PIPE, WATER L=1000	1	1	1	1	1	1		
30	1	23010-013000	CLAMP 13	2	2	2	2	2	2		

N:Old $\frac{\text{Yes}}{\text{No}}$ New, Q:Old $\frac{\text{No}}{\text{Yes}}$ New, R:Old $\frac{\text{Yes}}{\text{Yes}}$ New, S:Old $\frac{\text{No}}{\text{No}}$ New, W:Add, Z:Discontinued, F:Interchangeable by set, K:Q'ty Change

Copyright (C) YANMAR CO., LTD. All RightsReserved.

Fig.36. COOLING SEA WATER PIPE(8LV320,

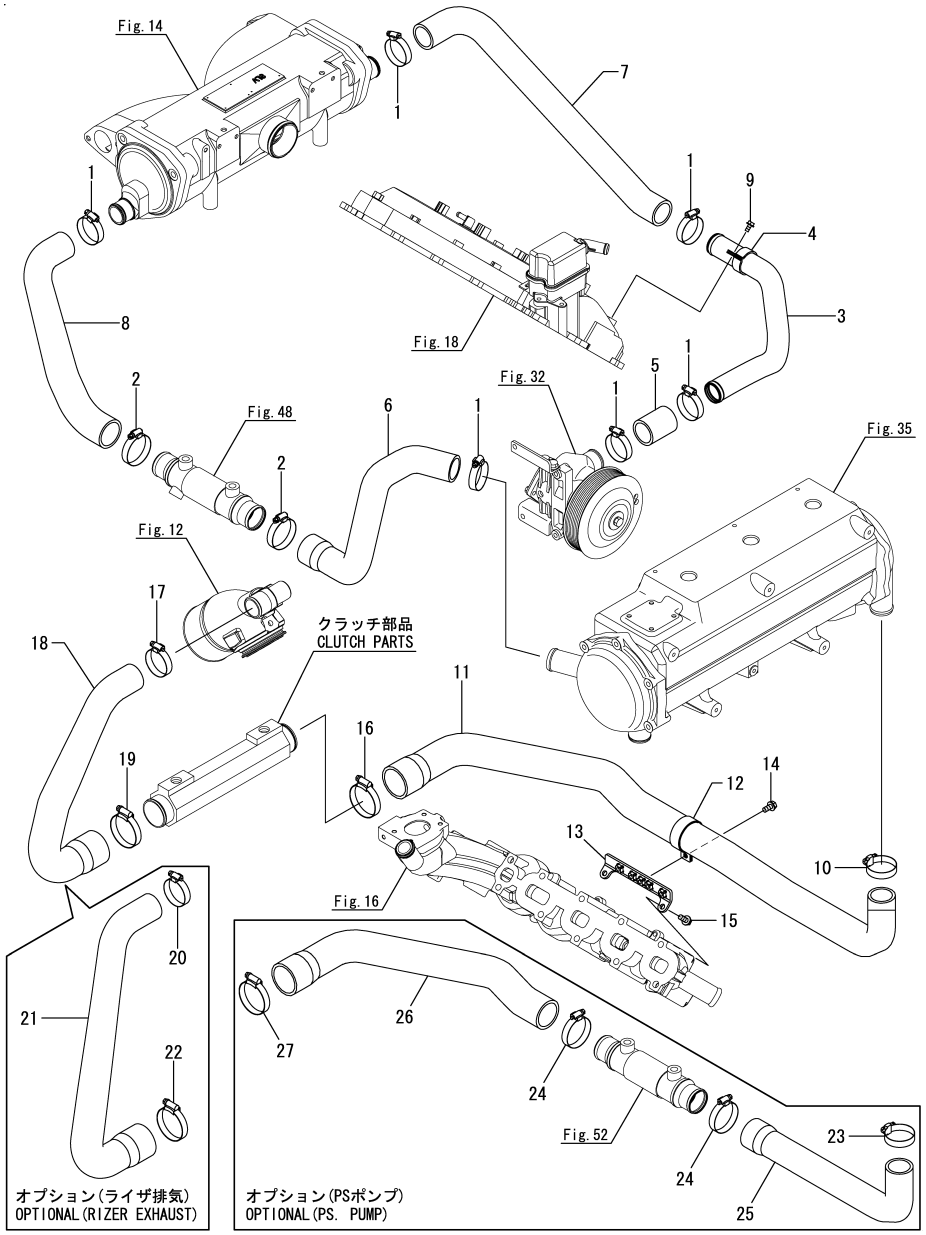

Remarks
(1)Optional parts.(Riser exhaust)
(2)Optional parts.(PS pump)
From 2012/09.

(A)=8LV320 (D)=8LV320Z
(B)=8LV350 (E)=8LV350Z
(C)=8LV370 (F)=8LV370Z

No.	Lev.	Parts No.	Description	Q'ty (A)	(B)	(C)	(D)	(E)	(F)	I	R
1	1	119172-48480	CLIP, HOSE 48	6	6	6					
2	1	119172-48540	CLIP, HOSE 54	2	2	2					
3	1	119798-49080	PIPE, WATER	1	1	1					
4	1	119798-49090	RETAINER, PIPE	1	1	1					
5	1	119775-49120	JOINT, RUBBER	1	1	1					
6	1	119798-49320	HOSE, WATER	1	1	1					
7	1	119798-49770	HOSE, WATER	1	1	1					
8	1	119798-49790	HOSE, WATER	1	1	1					
9	1	26106-060122	BOLT, M6X 12 PLATED	1	1	1					
10	1	119172-48480	CLIP, HOSE 48	1	1	1					
11	1	119798-49880	HOSE, WATER	1	1	1					
12	1	119798-49940	RETAINER, HOSE	1	1	1					
13	1	119798-55720	BRACKET	1	1	1					
14	1	26106-080162	BOLT, M8X 16 PLATED	1	1	1					
15	1	26106-080202	BOLT, M8X 20 PLATED	2	2	2					
16	1	43730-552161	CLIP HOSE,61	1	1	1					
17	1	119172-48480	CLIP, HOSE 48	1	1	1					
18	1	119798-49920	HOSE, WATER	1	1	1					
19	1	43730-552161	CLIP HOSE,61	1	1	1					
20	1	119172-48480	CLIP, HOSE 48	1	1	1					1
21	1	119798-49930	HOSE, WATER	1	1	1					1
22	1	43730-552161	CLIP HOSE,61	1	1	1					1
23	1	119172-48480	CLIP, HOSE 48	1	1	1					2
24	1	119172-48540	CLIP, HOSE 54	2	2	2					2
25	1	119799-49250	HOSE, WATER	1	1	1					2
26	1	119798-49890	HOSE,CSW M/G IN	1	1	1					2
27	1	43730-552161	CLIP HOSE,61	1	1	1					2

N:Old $\overset{\text{Yes}}{\underset{\text{No}}{\leftrightarrows}}$ New, Q:Old $\overset{\text{No}}{\underset{\text{Yes}}{\leftrightarrows}}$ New, R:Old $\overset{\text{Yes}}{\underset{\text{Yes}}{\leftrightarrows}}$ New, S:Old $\overset{\text{No}}{\underset{\text{No}}{\leftrightarrows}}$ New, W:Add, Z:Discontinued, F:Interchangeable by set, K:Q'ty Change

Copyright (C) YANMAR CO., LTD. All RightsReserved.

Fig.37. COOLING SEA WATER PIPE(8LV320Z,350Z,370Z)

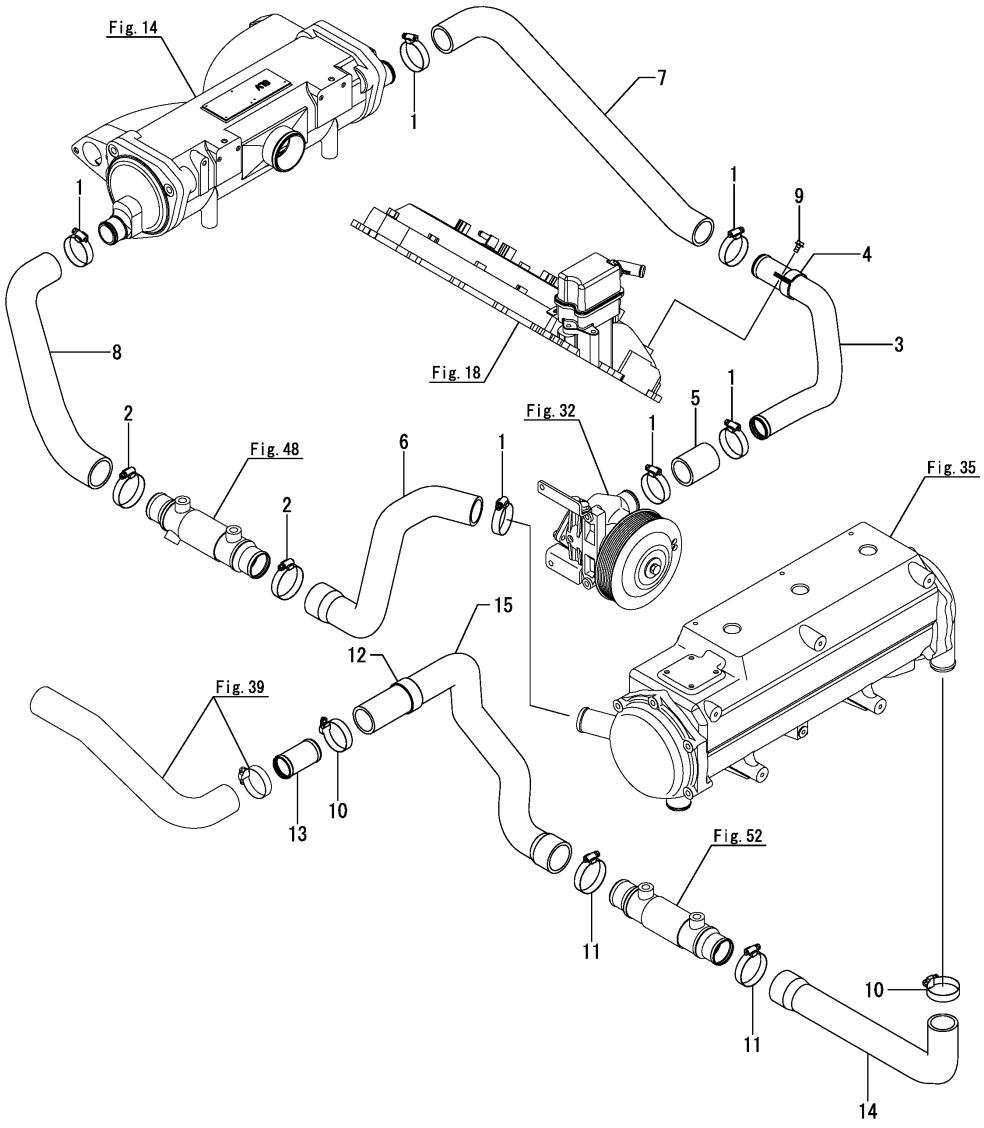

(A)=8LV320 (D)=8LV320Z
(B)=8LV350 (E)=8LV350Z
(C)=8LV370 (F)=8LV370Z

No.	Lev.	Parts No.	Description	Q'ty (A)	(B)	(C)	(D)	(E)	(F)	I	R
1	1	119172-48480	CLIP, HOSE 48				6	6	6		
2	1	119172-48540	CLIP, HOSE 54				2	2	2		
3	1	119798-49080	PIPE, WATER				1	1	1		
4	1	119798-49090	RETAINER, PIPE				1	1	1		
5	1	119775-49120	JOINT, RUBBER				1	1	1		
6	1	119798-49320	HOSE, WATER				1	1	1		
7	1	119798-49770	HOSE, WATER				1	1	1		
8	1	119798-49790	HOSE, WATER				1	1	1		
9	1	26106-060122	BOLT, M6X 12 PLATED				1	1	1		
10	1	119172-48480	CLIP, HOSE 48				2	2	2		
11	1	119172-48540	CLIP, HOSE 54				2	2	2		
12	1	119593-49080	BAND				1	1	1		
13	1	119779-49230	PIPE				1	1	1		
14	1	119799-49250	HOSE, WATER				1	1	1		
15	1	119799-49740	HOSE, WATER				1	1	1		

N:Old $\overset{\text{Yes}}{\underset{\text{No}}{\leftrightarrow}}$ New, Q:Old $\overset{\text{No}}{\underset{\text{Yes}}{\leftrightarrow}}$ New, R:Old $\overset{\text{Yes}}{\underset{\text{Yes}}{\leftrightarrow}}$ New, S:Old $\overset{\text{No}}{\underset{\text{No}}{\leftrightarrow}}$ New, W:Add, Z:Discontinued, F:Interchangeable by set, K:Q'ty Change

Copyright (C) YANMAR CO., LTD. All RightsReserved.

Fig.38. COOLING SEA WATER PIPE(DRIVE)

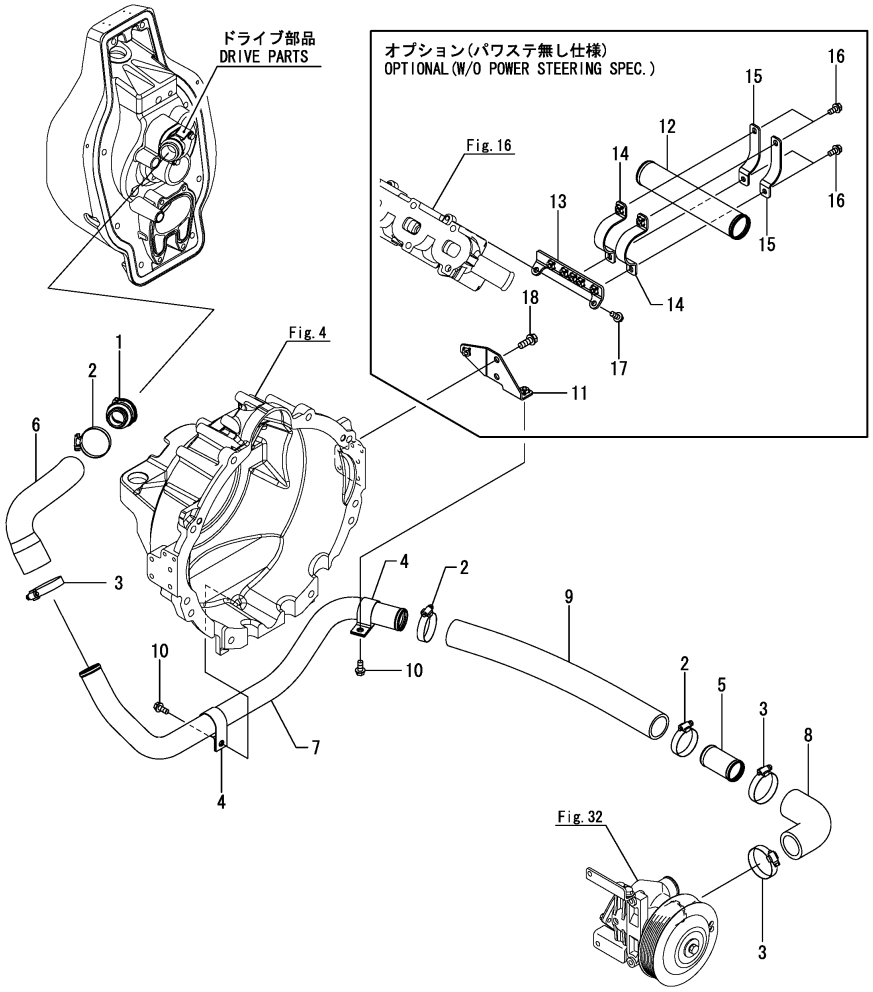

(A)=8LV320 (B)=8LV350 (C)=8LV370 (D)=8LV320Z (E)=8LV350Z (F)=8LV370Z

No.	Lev.	Parts No.	Description	Q'ty (A)	(B)	(C)	(D)	(E)	(F)	I	R
1	1	120650-42630	JOINT				1	1	1		
2	1	119172-48480	CLIP, HOSE 48				3	3	3		
3	1	119172-48540	CLIP, HOSE 54				3	3	3		
4	1	119779-49210	RETAINER				2	2	2		
5	1	119779-49230	PIPE				1	1	1		
6	1	119799-49610	HOSE, DRIVE				1	1	1		
7	1	119799-49620	PIPE, WATER				1	1	1		
8	1	119799-49640	HOSE				1	1	1		
9	1	119779-49910	HOSE, WATER 2.5M				1	1	1		
10	1	26106-080182	BOLT, M8X 18 PLATED				2	2	2		1
11	1	119799-26580	BRACKET				1	1	1		1
12	1	119799-49800	PIPE, WATER				1	1	1		1
13	1	119798-55720	BRACKET				1	1	1		1
14	1	119798-55770	BAND, COOLER				2	2	2		1
15	1	119798-55780	BAND, COOLER				2	2	2		1
16	1	26106-080162	BOLT, M8X 16 PLATED				4	4	4		1
17	1	26106-080202	BOLT, M8X 20 PLATED				2	2	2		1
18	1	26106-100252	BOLT, M10X 25 PLATED				2	2	2		1

Remarks
(1)Optional parts.
(Non power steering spec.)

N:Old $\xleftarrow[\text{No}]{\text{Yes}}$ New, Q:Old $\xleftarrow[\text{Yes}]{\text{No}}$ New, R:Old $\xleftarrow[\text{Yes}]{\text{Yes}}$ New, S:Old $\xleftarrow[\text{No}]{\text{No}}$ New, W:Add, Z:Discontinued, F:Interchangeable by set, K:Q'ty Change

Copyright (C) YANMAR CO., LTD. All RightsReserved.

Fig.39. COOLING SEA WATER PIPE(MIXING/BY-PASS)

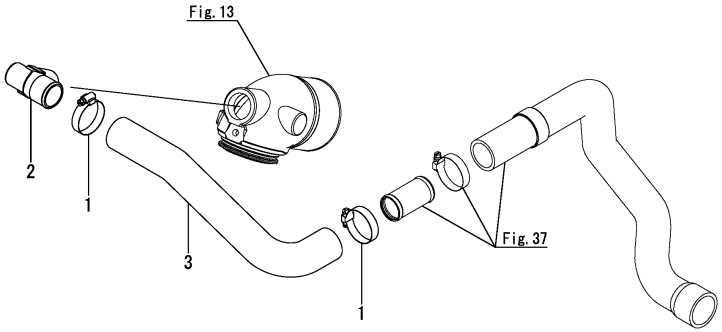

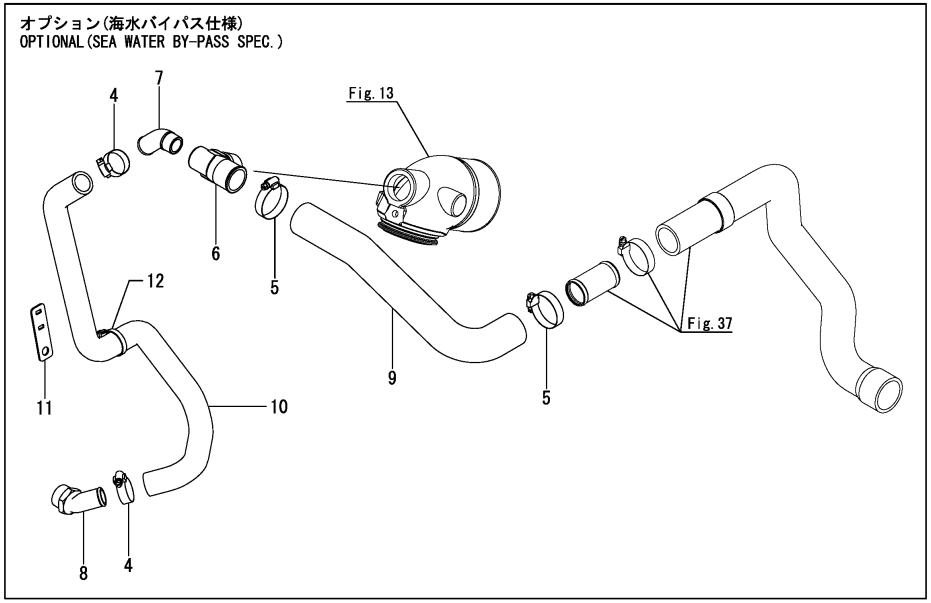

(A)=8LV320 (B)=8LV350 (C)=8LV370 (D)=8LV320Z (E)=8LV350Z (F)=8LV370Z

No.	Lev.	Parts No.	Description	Q'ty (A)	(B)	(C)	(D)	(E)	(F)	I	R
1	1	119172-48480	CLIP, HOSE 48				2	2	2		
2	1	119775-48640	JOINT				1	1	1		
3	1	119799-49810	HOSE, MIXING				1	1	1		
4	1	119172-48350	CLIP, HOSE 35				2	2	2		1
5	1	119172-48480	CLIP, HOSE 48				2	2	2		1
6	1	119779-48620	BEND				1	1	1		1
7	1	119175-49550	JOINT				1	1	1		1
8	1	119779-49550	JOINT				1	1	1		1
9	1	119799-49810	HOSE, MIXING				1	1	1		1
10	1	119799-49820	HOSE, BYPASS				1	1	1		1
11	1	119799-49830	RETAINER				1	1	1		1
12	1	29622-140001	BAND, RF140				1	1	1		1

Remarks
(1)Optional parts.
(Sea water by-pass spec.)

N:Old ◄Yes/No► New, Q:Old ◄No/Yes► New, R:Old ◄Yes/Yes► New, S:Old ◄No/No► New, W:Add, Z:Discontinued, F:Interchangeable by set, K:Q'ty Change

Copyright (C) YANMAR CO., LTD. All RightsReserved.

Fig.40. COOLING FRESH WATER PIPE

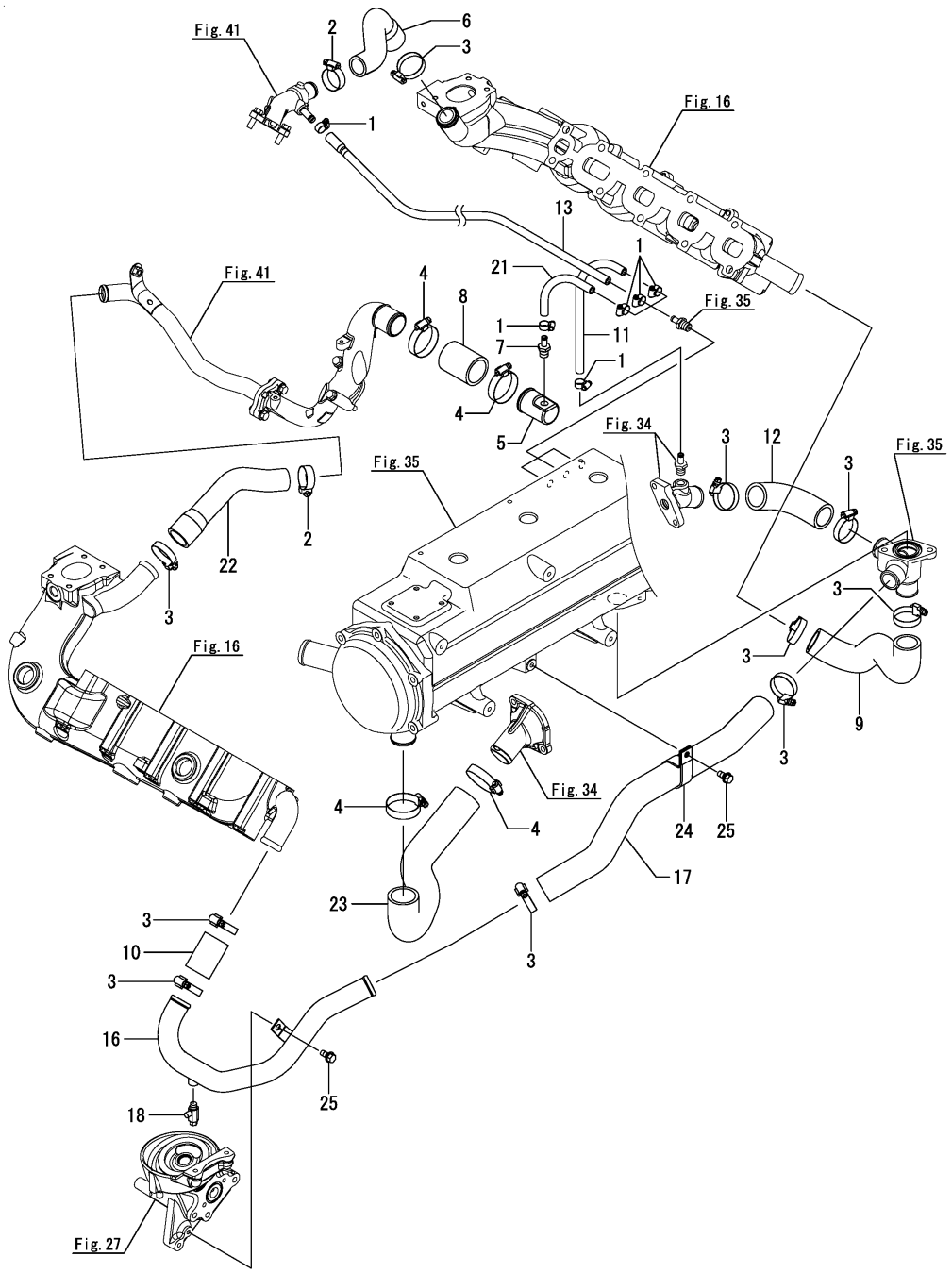

(A)=8LV320 (B)=8LV350 (C)=8LV370 (D)=8LV320Z (E)=8LV350Z (F)=8LV370Z

No.	Lev.	Parts No.	Description	Q'ty (A)	(B)	(C)	(D)	(E)	(F)	I	R
1	1	119172-48130	CLIP, HOSE 13	6	6	6	6	6	6		
2	1	119172-48350	CLIP, HOSE 35	2	2	2	2	2	2		
3	1	119172-48410	CLIP, HOSE 41	10	10	10	10	10	10		
4	1	119172-48480	CLIP, HOSE 48	4	4	4	4	4	4		
5	1	119798-48530	COVER	1	1	1	1	1	1		
6	1	119798-49110	HOSE, WATER	1	1	1	1	1	1		
7	1	121550-49111	JOINT, PT1/4	1	1	1	1	1	1		
8	1	119775-49120	JOINT, RUBBER	1	1	1	1	1	1		
9	1	119798-49140	HOSE, WATER	1	1	1	1	1	1		
10	1	120445-49150	JOINT, RUBBER	1	1	1	1	1	1		
11	1	119173-49160	PIPE, WATER	1	1	1	1	1	1		
12	1	119798-49200	HOSE, WATER	1	1	1	1	1	1		
13	1	119798-49270	HOSE, AIR VENT	1	1	1	1	1	1		
16	1	119798-49280	PIPE, WATER	1	1	1	1	1	1		
17	1	119798-49290	HOSE, WATER	1	1	1	1	1	1		
18	1	129670-49290	COCK ASSY, R1/8	1	1	1	1	1	1		
21	1	119171-49300	PIPE, WATER	1	1	1	1	1	1		
22	1	119798-49310	HOSE, WATER	1	1	1	1	1	1		
23	1	119798-49360	HOSE, WATER	1	1	1	1	1	1		
24	1	119798-49420	RETAINER	1	1	1	1	1	1		
25	1	26106-080162	BOLT, M8X 16 PLATED	2	2	2	2	2	2		

N:Old $\xleftrightarrow[\text{No}]{\text{Yes}}$ New, Q:Old $\xleftrightarrow[\text{Yes}]{\text{No}}$ New, R:Old $\xleftrightarrow[\text{Yes}]{\text{Yes}}$ New, S:Old $\xleftrightarrow[\text{No}]{\text{No}}$ New, W:Add, Z:Discontinued, F:Interchangeable by set, K:Q'ty Change

Copyright (C) YANMAR CO., LTD. All RightsReserved.

Fig.41. COOLING FRESH WATER PIPE(BY-PASS)

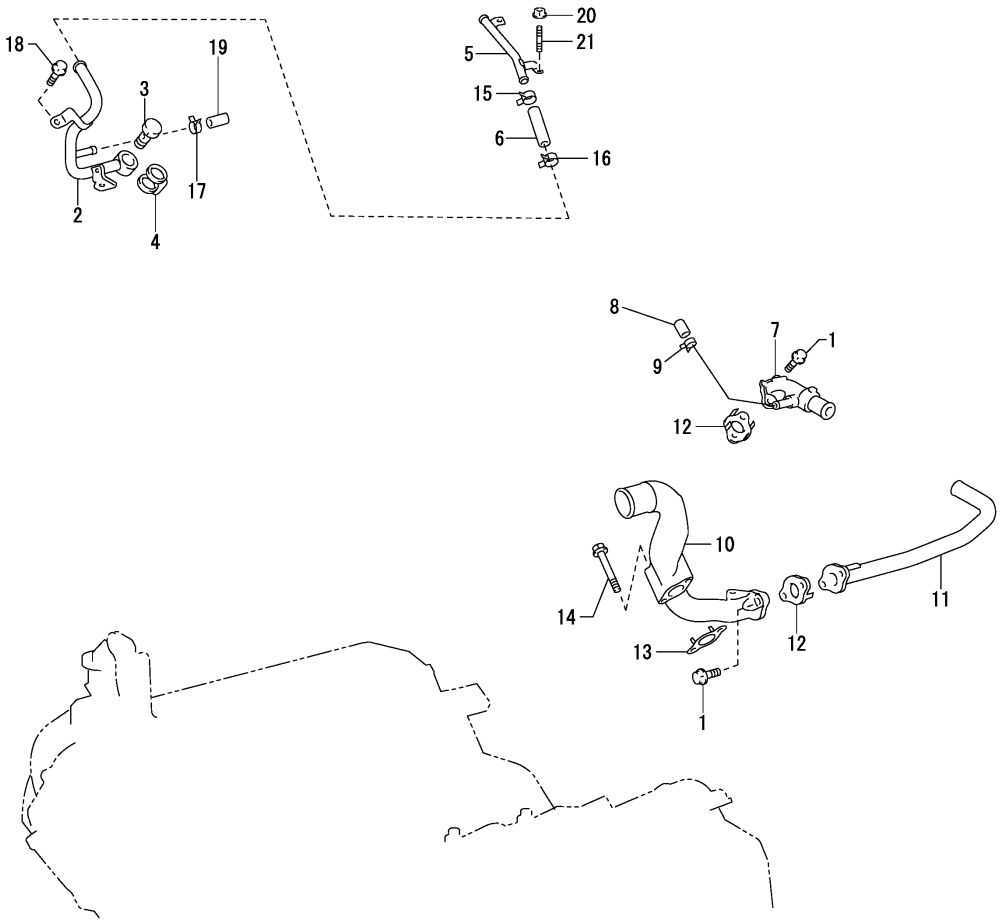

(A)=8LV320 (D)=8LV320Z
(B)=8LV350 (E)=8LV350Z
(C)=8LV370 (F)=8LV370Z

No.	Lev.	Parts No.	Description	Q'ty (A)	(B)	(C)	(D)	(E)	(F)	I	R
1	1	119798-14150	BOLT, M8X25	4	4	4	4	4	4		
2	1	119798-49600	PIPE, WATER	1	1	1	1	1	1		
3	1	119798-49610	BOLT, JOINT M20X30	1	1	1	1	1	1		
4	1	119798-49620	GASKET	1	1	1	1	1	1		
5	1	119798-49630	PIPE, WATER	1	1	1	1	1	1		
6	1	119798-49640	HOSE, WATER	1	1	1	1	1	1		
7	1	119798-49650	OUTLET, WATER	1	1	1	1	1	1		
8	1	119798-49660	GASKET	1	1	1	1	1	1		
9	1	119798-49670	CLIP, HOSE	1	1	1	1	1	1		
10	1	119798-49680	PIPE, WATER	1	1	1	1	1	1		
11	1	119798-49690	PIPE, WATER	1	1	1	1	1	1		
12	1	119798-49700	GASKET	2	2	2	2	2	2		
13	1	119798-49710	GASKET	1	1	1	1	1	1		
14	1	119798-49720	BOLT, FLANGE M8X70	2	2	2	2	2	2		
15	1	119798-49730	CLIP, HOSE	1	1	1	1	1	1		
16	1	119798-49740	CLIP, HOSE	1	1	1	1	1	1		
17	1	119798-49840	CLIP, HOSE	1	1	1	1	1	1		
18	1	119798-49860	BOLT, M6X14	1	1	1	1	1	1		
19	1	119798-49870	PLUG	1	1	1	1	1	1		
20	1	119798-59100	NUT, M6	1	1	1	1	1	1		
21	1	119798-59840	STUD, 6	1	1	1	1	1	1		

N:Old $\xleftrightarrow[\text{No}]{\text{Yes}}$ New, Q:Old $\xleftrightarrow[\text{Yes}]{\text{No}}$ New, R:Old $\xleftrightarrow[\text{Yes}]{\text{Yes}}$ New, S:Old $\xleftrightarrow[\text{No}]{\text{No}}$ New, W:Add, Z:Discontinued, F:Interchangeable by set, K:Q'ty Change

Copyright (C) YANMAR CO., LTD. All RightsReserved.

Fig.42. HOT WATER SYSTEM

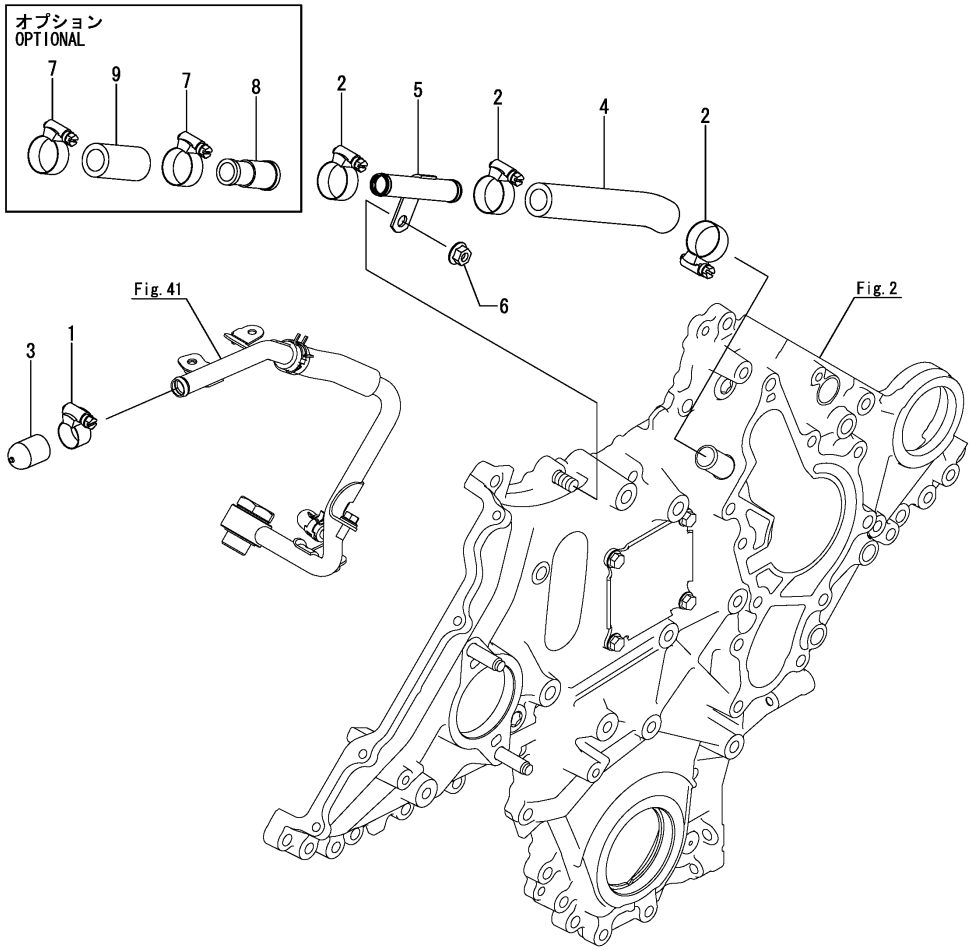

(A)=8LV320 (B)=8LV350 (C)=8LV370 (D)=8LV320Z (E)=8LV350Z (F)=8LV370Z

No.	Lev.	Parts No.	Description	Q'ty (A)	(B)	(C)	(D)	(E)	(F)	I	R
1	1	119172-48190	CLIP, HOSE 19	1	1	1	1	1	1		
2	1	119172-48250	CLIP, HOSE 25	3	3	3	3	3	3		
3	1	119798-49950	CAP	1	1	1	1	1	1		
4	1	119798-49960	HOSE, WATER RETURN	1	1	1	1	1	1		
5	1	119798-49970	JOINT	1	1	1	1	1	1		
6	1	26366-080002	NUT, M8	1	1	1	1	1	1		
7	1	119172-48250	CLIP, HOSE 25	2	2	2	2	2	2		W
	(A=EXXXXX)	(B=EXXXXX)	(C=EXXXXX) (D=EXXXXX)	(E=EXXXXX)				(F=EXXXXX)			
8	1	119798-49900	ADAPTER	1	1	1	1	1	1		W
	(A=EXXXXX)	(B=EXXXXX)	(C=EXXXXX) (D=EXXXXX)	(E=EXXXXX)				(F=EXXXXX)			
9	1	128275-49900	JOINT, D20/13XL40	1	1	1	1	1	1		W
	(A=EXXXXX)	(B=EXXXXX)	(C=EXXXXX) (D=EXXXXX)	(E=EXXXXX)				(F=EXXXXX)			

N:Old $\xleftrightarrow[\text{No}]{\text{Yes}}$ New, Q:Old $\xleftrightarrow[\text{Yes}]{\text{No}}$ New, R:Old $\xleftrightarrow[\text{Yes}]{\text{Yes}}$ New, S:Old $\xleftrightarrow[\text{No}]{\text{No}}$ New, W:Add, Z:Discontinued, F:Interchangeable by set, K:Q'ty Change

Copyright (C) YANMAR CO., LTD. All RightsReserved.

Fig.43. KINGSTON COCK(OPTIONAL)

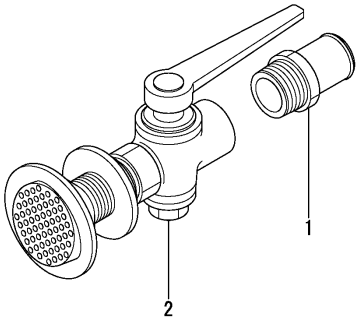

(A)=8LV320 (D)=8LV320Z
(B)=8LV350 (E)=8LV350Z
(C)=8LV370 (F)=8LV370Z

No.	Lev.	Parts No.	Description	Q'ty (A)	(B)	(C)	(D)	(E)	(F)	I	R
1	1	43530-500610	JOINT, PIPE 30A	1	1	1	1	1	1		
2	1	43662-030031	COCK ASSY, KINGSTON	1	1	1	1	1	1		

N:Old ◄Yes/No► New, Q:Old ◄No/Yes► New, R:Old ◄Yes/Yes► New, S:Old ◄No/No► New, W:Add, Z:Discontinued, F:Interchangeable by set, K:Q'ty Change

Copyright (C) YANMAR CO., LTD. All RightsReserved.

Fig.44. FUEL INJECTION PUMP & FUEL INJECTION PIPE

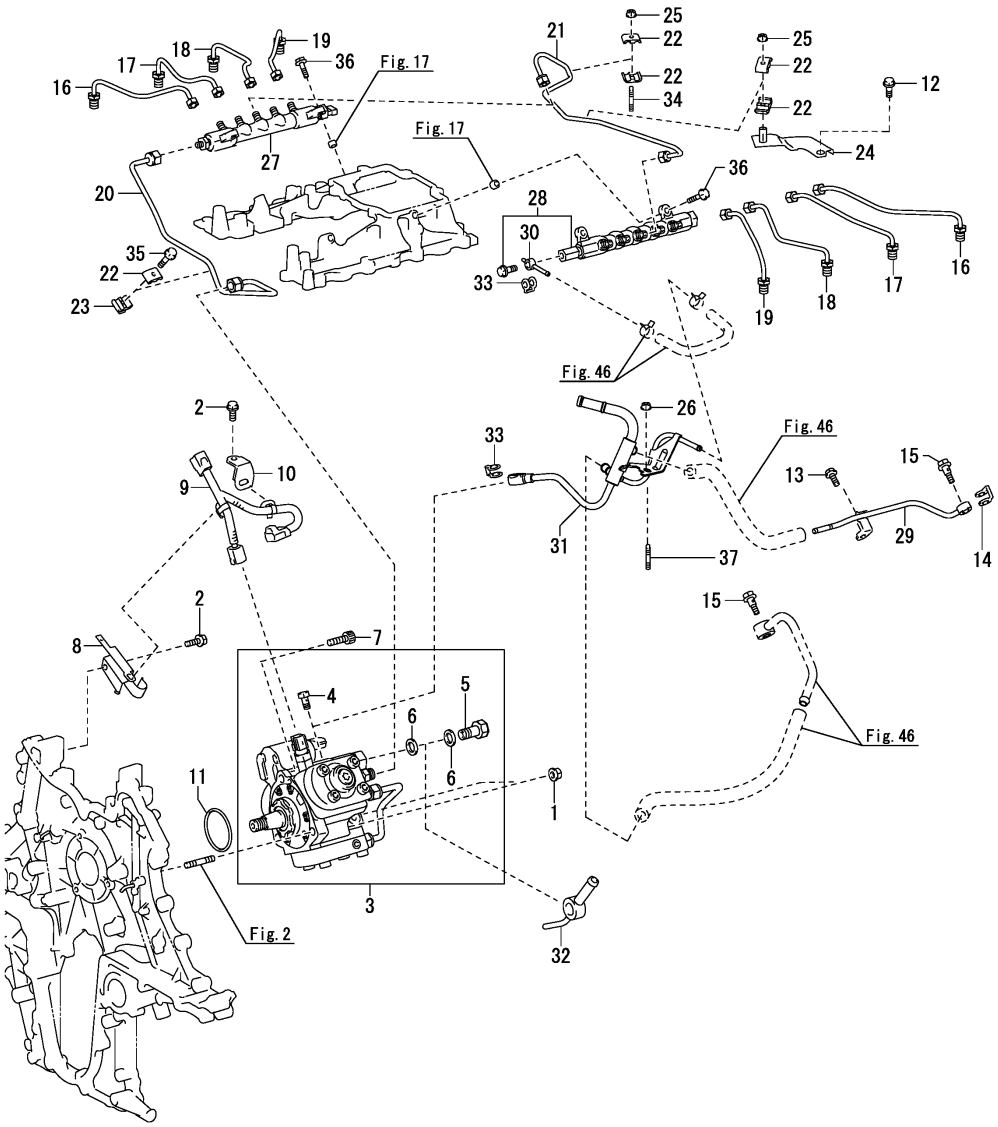

(A)=8LV320 (B)=8LV350 (C)=8LV370 (D)=8LV320Z (E)=8LV350Z (F)=8LV370Z

No.	Lev.	Parts No.	Description	Q'ty (A)	(B)	(C)	(D)	(E)	(F)	I	R
1	1	119798-01800	NUT, M8	2	2	2	2	2	2		
2	1	119798-49860	BOLT, M6X14	2	2	2	2	2	2		
3	1	119798-51010	PUMP ASSY, INJECTION	1	1	1	1	1	1		
4	2	119798-51020	SCREW	1	1	1	1	1	1		
5	2	119798-51030	SCREW	1	1	1	1	1	1		
6	2	119798-51040	GASKET	2	2	2	2	2	2		
7	1	119798-51050	BOLT, M8X29	1	1	1	1	1	1		
8	1	119798-51060	BRACKET	1	1	1	1	1	1		
9	1	119798-51070	WIRE	1	1	1	1	1	1		
10	1	119798-51080	BRACKET	1	1	1	1	1	1		
11	1	119770-90900	O-RING	1	1	1	1	1	1		
12	1	119798-49860	BOLT, M6X14	1	1	1	1	1	1		
13	1	119798-49860	BOLT, M6X14	1	1	1	1	1	1		
14	1	119798-53070	GASKET	1	1	1	1	1	1		
15	1	119798-53080	BOLT, JOINT M8X30	2	2	2	2	2	2		
16	1	119798-59010	PIPE ASSY, INJECTION	2	2	2	2	2	2		
17	1	119798-59020	PIPE ASSY, INJECTION	2	2	2	2	2	2		
18	1	119798-59030	PIPE ASSY, INJECTION	2	2	2	2	2	2		
19	1	119798-59040	PIPE ASSY, INJECTION	2	2	2	2	2	2		
20	1	119798-59050	PIPE ASSY, INJECTION	1	1	1	1	1	1		
21	1	119798-59060	PIPE ASSY, INJECTION	1	1	1	1	1	1		
22	1	119798-59070	CLAMP	5	5	5	5	5	5		
23	1	119798-59080	CLAMP	1	1	1	1	1	1		
24	1	119798-59090	SUPPORT	1	1	1	1	1	1		
25	1	119798-59100	NUT, M6	2	2	2	2	2	2		
26	1	119798-59100	NUT, M6	1	1	1	1	1	1		
27	1	119798-59110	RAIL ASSY, COMMON	1	1	1	1	1	1		
28	1	119798-59120	RAIL ASSY, COMMON	1	1	1	1	1	1		
29	1	119798-59140	PIPE, NOZZLE LEAKAGE	1	1	1	1	1	1		
30	1	119798-59150	PIPE, NOZZLE LEAKAGE	1	1	1	1	1	1		
31	1	119798-59160	PIPE ASSY, FUEL	1	1	1	1	1	1		
32	1	119798-59170	PIPE, FUEL	1	1	1	1	1	1		
33	1	119798-59190	GASKET	2	2	2	2	2	2		
34	1	119798-59810	STUD, 6	1	1	1	1	1	1		
35	1	119798-59820	BOLT, FLANGE M6X25	1	1	1	1	1	1		
36	1	119798-59830	BOLT, FLANGE M8X35	4	4	4	4	4	4		
37	1	119798-59840	STUD, 6	1	1	1	1	1	1		

N:Old ◄Yes/No► New, Q:Old ◄No/Yes► New, R:Old ◄Yes/Yes► New, S:Old ◄No/No► New, W:Add, Z:Discontinued, F:Interchangeable by set, K:Q'ty Change

Copyright (C) YANMAR CO., LTD. All RightsReserved.

Fig.45. FUEL INJECTION VALVE

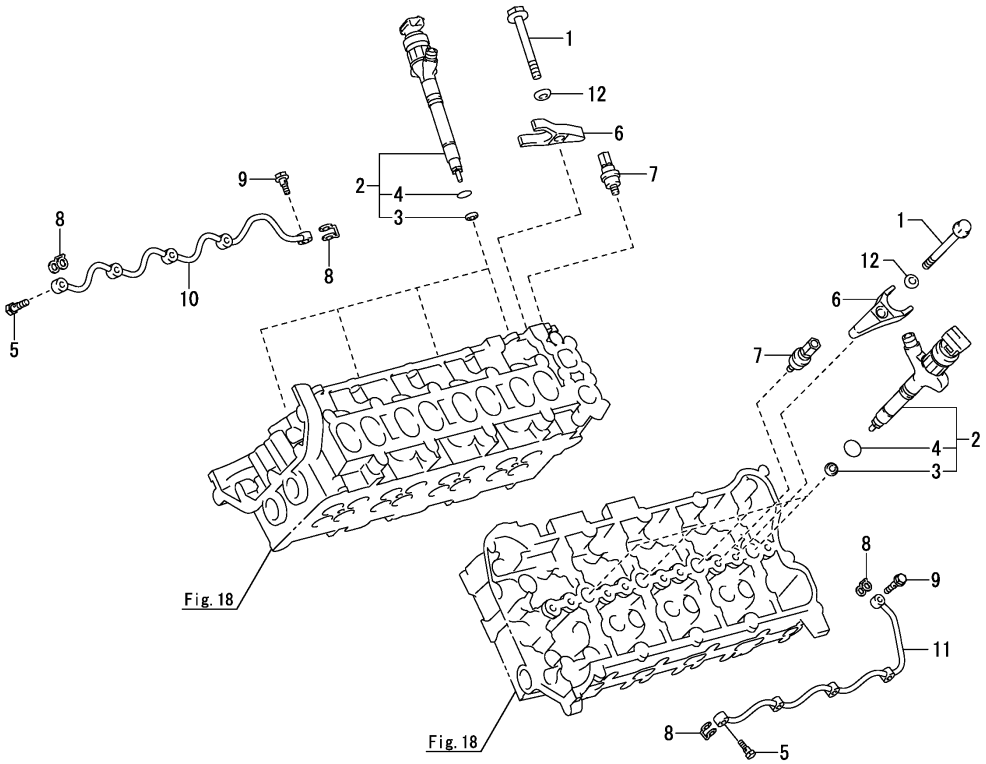

(A)=8LV320 (D)=8LV320Z
(B)=8LV350 (E)=8LV350Z
(C)=8LV370 (F)=8LV370Z

No.	Lev.	Parts No.	Description	Q'ty (A)	(B)	(C)	(D)	(E)	(F)	I	R
1	1	119798-01700	BOLT, FLANGE M8X80	8	8	8	8	8	8		
2	1	119798-53010	INJECTOR ASSY	8	8	8	8	8	8		
3	2	119798-53020	SEAT, NOZZLE	8	8	8	8	8	8		
4	2	119798-53030	O-RING	8	8	8	8	8	8		
5	1	119798-53040	SCREW	8	8	8	8	8	8		
6	1	119798-53050	CLAMP	8	8	8	8	8	8		
7	1	119798-53060	SEAT, HOLDER	8	8	8	8	8	8		
8	1	119798-53070	GASKET	10	10	10	10	10	10		
9	1	119798-53080	BOLT, JOINT M8X30	2	2	2	2	2	2		
10	1	119798-53090	PIPE, NOZZLE LEAKAGE	1	1	1	1	1	1		
11	1	119798-53100	PIPE, NOZZLE LEAKAGE	1	1	1	1	1	1		
12	1	119771-90310	WASHER	8	8	8	8	8	8		

N:Old $\frac{\text{Yes}}{\text{No}}$ New, Q:Old $\frac{\text{No}}{\text{Yes}}$ New, R:Old $\frac{\text{Yes}}{\text{Yes}}$ New, S:Old $\frac{\text{No}}{\text{No}}$ New, W:Add, Z:Discontinued, F:Interchangeable by set, K:Q'ty Change

Copyright (C) YANMAR CO., LTD. All RightsReserved.

Fig.46. FUEL PIPE

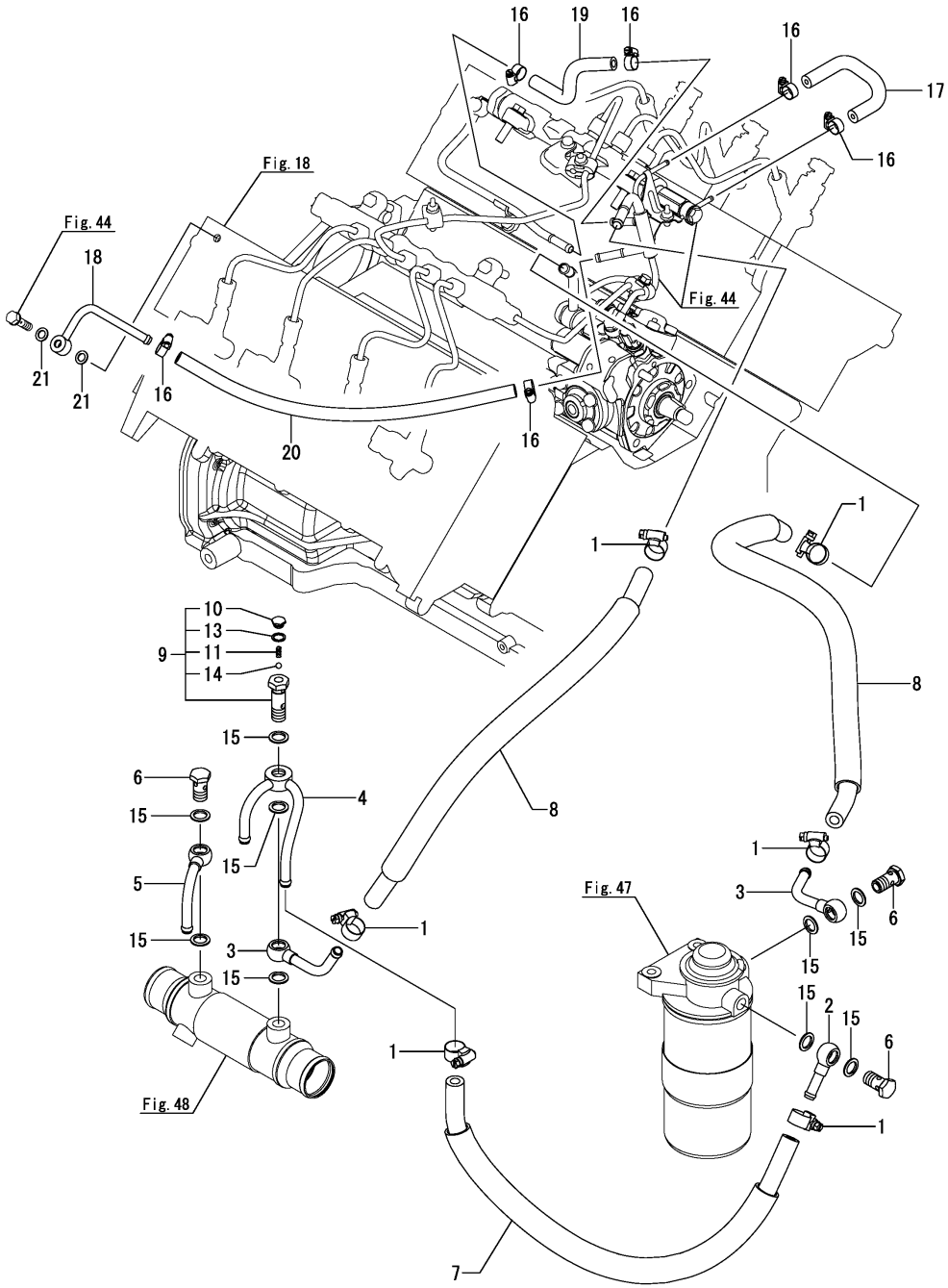

(A)=8LV320 (B)=8LV350 (C)=8LV370 (D)=8LV320Z (E)=8LV350Z (F)=8LV370Z

No.	Lev.	Parts No.	Description	Q'ty (A)	(B)	(C)	(D)	(E)	(F)	I	R
1	1	119172-48190	CLIP, HOSE 19	6	6	6	6	6	6		
2	1	119799-59210	JOINT, PIPE	1	1	1	1	1	1		
3	1	119799-59220	JOINT, PIPE	2	2	2	2	2	2		
4	1	119798-59230	JOINT	1	1	1	1	1	1		
5	1	119798-59250	JOINT	1	1	1	1	1	1		
6	1	148616-59430	BOLT, M14X26	3	3	3	3	3	3		
7	1	119798-59510	PIPE ASSY, FUEL	1	1	1	1	1	1		
8	1	119798-59520	PIPE ASSY, FUEL	2	2	2	2	2	2		
9	1	119799-59600	VALVE, RELIEF	1	1	1	1	1	1		
10	2	127610-39350	RETAINER, SPRING	1	1	1	1	1	1		
11	2	127687-39360	SPRING	1	1	1	1	1	1		
13	2	23414-100014	GASKET, 10X1.0	1	1	1	1	1	1		
14	2	24190-070001	BALL, STEEL 7/32	1	1	1	1	1	1		
15	1	22190-140002	WASHER, SEAL 14	9	9	9	9	9	9		
16	1	119172-48130	CLIP, HOSE 13	6	6	6	6	6	6		
17	1	119798-59550	PIPE, FUEL	1	1	1	1	1	1		
18	1	119798-59570	JOINT ASSY	1	1	1	1	1	1		
19	1	119798-59610	PIPE, FUEL	1	1	1	1	1	1		
20	1	119798-59620	PIPE, FUEL	1	1	1	1	1	1		
21	1	23414-080000	GASKET, 8X1.0	2	2	2	2	2	2		

N:Old $\frac{\text{Yes}}{\text{No}}$ New, Q:Old $\frac{\text{No}}{\text{Yes}}$ New, R:Old $\frac{\text{Yes}}{\text{Yes}}$ New, S:Old $\frac{\text{No}}{\text{No}}$ New, W:Add, Z:Discontinued, F:Interchangeable by set, K:Q'ty Change

Copyright (C) YANMAR CO., LTD. All RightsReserved.

Fig.47. FUEL STRAINER

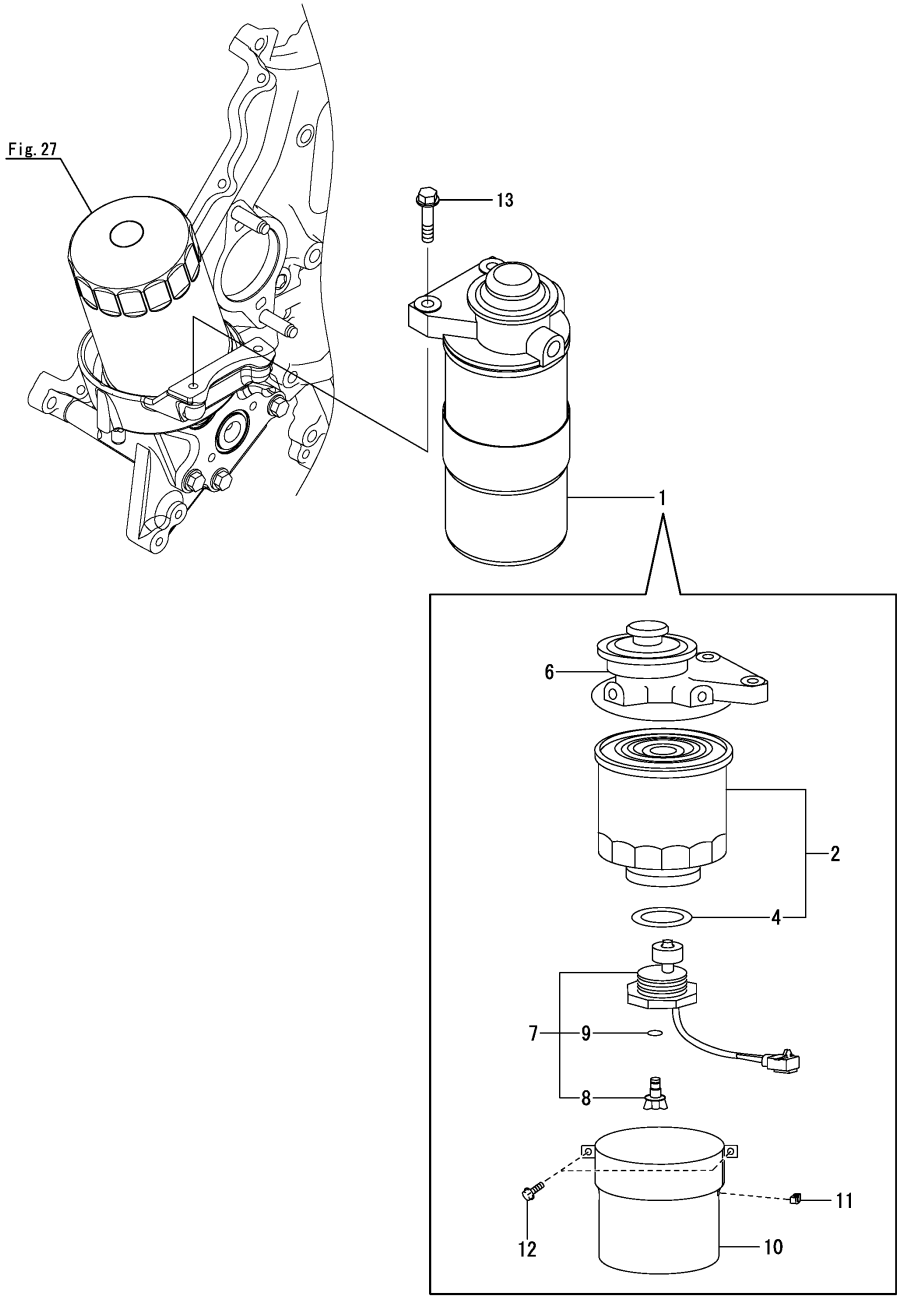

(A)=8LV320 (B)=8LV350 (C)=8LV370 (D)=8LV320Z (E)=8LV350Z (F)=8LV370Z

No.	Lev.	Parts No.	Description	Q'ty (A)	(B)	(C)	(D)	(E)	(F)	I	R
1	1	119798-55100	FILTER ASSY, FUEL	1	1	1	1	1	1		
2	2	119798-55110	ELEMENT ASSY, FUEL	1	1	1	1	1	1		
4	4	119798-55120	O-RING	1	1	1	1	1	1		
6	2	119798-55130	CAP ASSY, FILTER	1	1	1	1	1	1		
7	2	119798-55140	SWITCH, WARNING	1	1	1	1	1	1		
8	3	119798-55150	PLUG, DRAIN	1	1	1	1	1	1		
9	3	119798-55160	O-RING	1	1	1	1	1	1		
10	2	119798-55170	CASE, ELEMENT	1	1	1	1	1	1		
11	2	119798-55180	RUBBER, CUSHION	1	1	1	1	1	1		
12	2	119798-55190	BOLT	2	2	2	2	2	2		
13	1	26106-080352	BOLT, M8X 35 PLATED	2	2	2	2	2	2		

N:Old $\xleftarrow[\text{No}]{\text{Yes}}$ New, Q:Old $\xleftarrow[\text{Yes}]{\text{No}}$ New, R:Old $\xleftarrow[\text{Yes}]{\text{Yes}}$ New, S:Old $\xleftarrow[\text{No}]{\text{No}}$ New, W:Add, Z:Discontinued, F:Interchangeable by set, K:Q'ty Change

Copyright (C) YANMAR CO., LTD. All RightsReserved.

Fig.48. FUEL COOLER

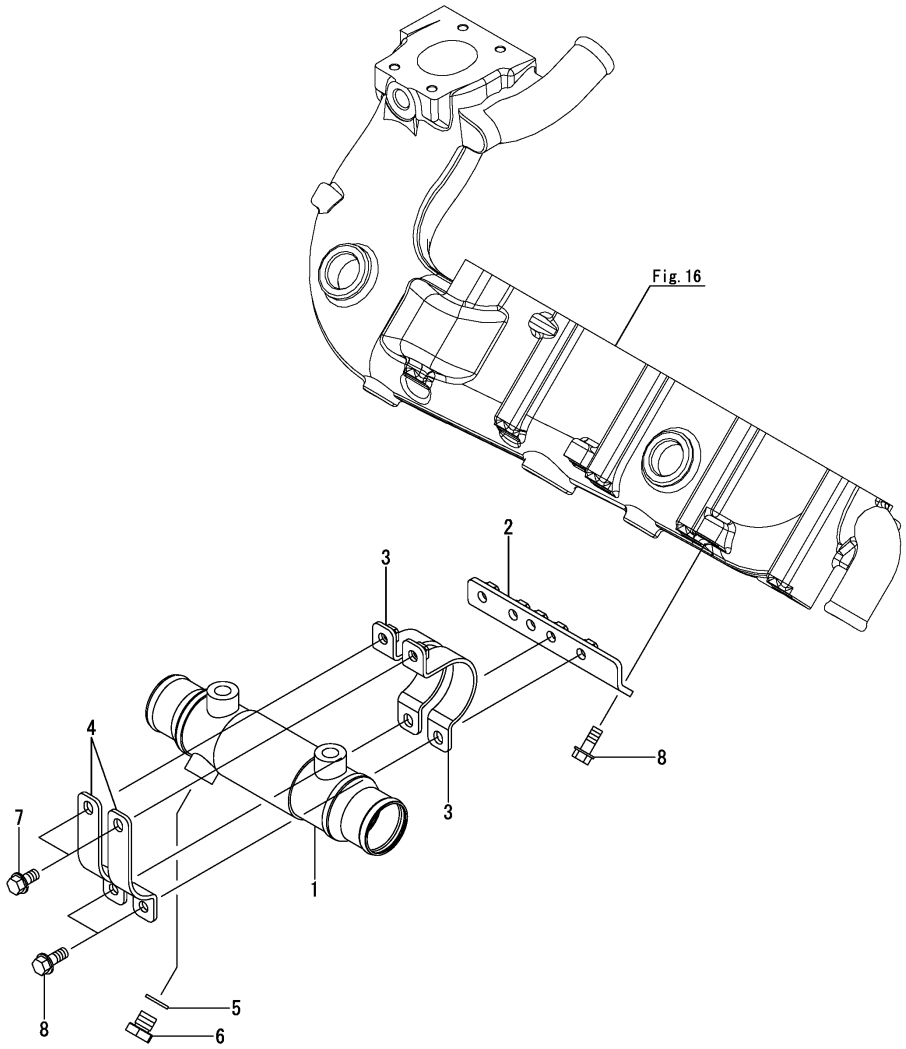

(A)=8LV320 (D)=8LV320Z
(B)=8LV350 (E)=8LV350Z
(C)=8LV370 (F)=8LV370Z

No.	Lev.	Parts No.	Description	Q'ty (A)	(B)	(C)	(D)	(E)	(F)	I	R
1	1	119799-26800	COOLER ASSY, OIL	1	1	1	1	1	1		
2	1	119798-55720	BRACKET	1	1	1	1	1	1		
3	1	119798-55770	BAND, COOLER	2	2	2	2	2	2		
4	1	119798-55780	BAND, COOLER	2	2	2	2	2	2		
5	1	23414-130000	GASKET, 13X1.0	1	1	1	1	1	1		
6	1	23894-020002	PLUG, G1/4	1	1	1	1	1	1		
7	1	26106-080162	BOLT, M8X 16 PLATED	2	2	2	2	2	2		
8	1	26106-080202	BOLT, M8X 20 PLATED	4	4	4	4	4	4		

N:Old $\frac{\text{Yes}}{\text{No}}$ New, Q:Old $\frac{\text{No}}{\text{Yes}}$ New, R:Old $\frac{\text{Yes}}{\text{Yes}}$ New, S:Old $\frac{\text{No}}{\text{No}}$ New, W:Add, Z:Discontinued, F:Interchangeable by set, K:Q'ty Change

Copyright (C) YANMAR CO., LTD. All RightsReserved.

Fig.49. OIL/WATER SEPARATOR(OPTIONAL)

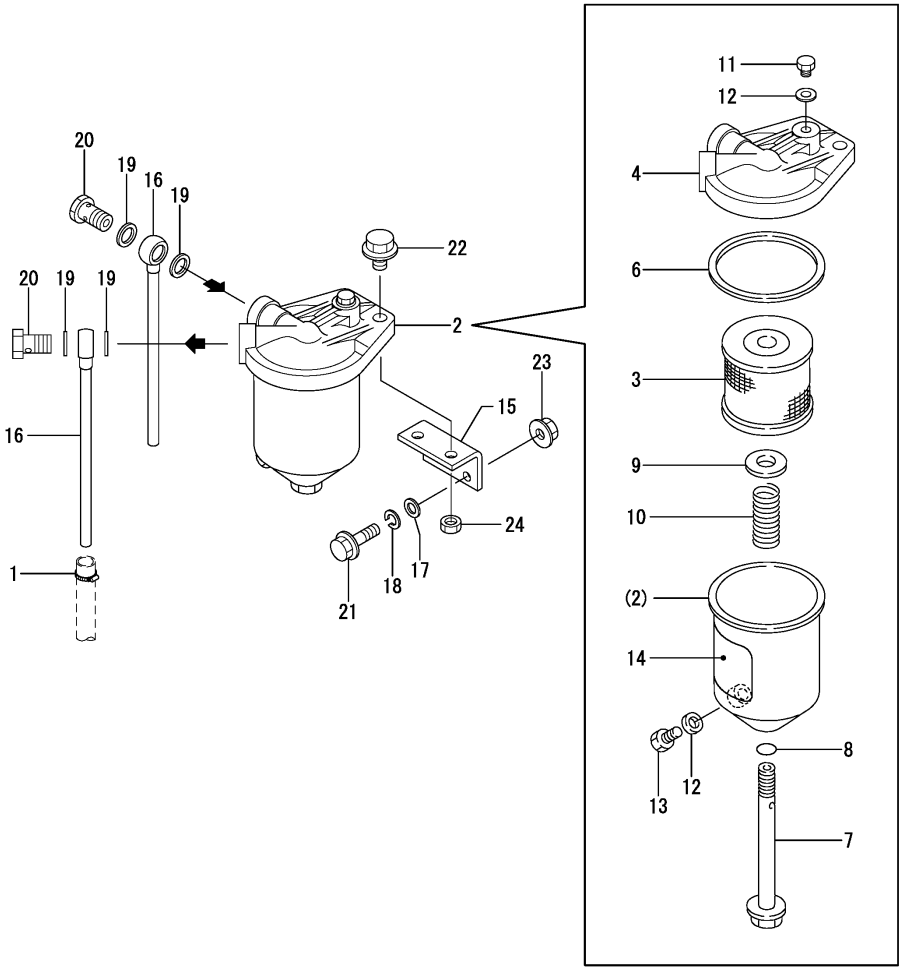

(A)=8LV320 (B)=8LV350 (C)=8LV370 (D)=8LV320Z (E)=8LV350Z (F)=8LV370Z

No.	Lev.	Parts No.	Description	Q'ty (A)	(B)	(C)	(D)	(E)	(F)	I	R
1	1	119172-48190	CLIP, HOSE 19	2	2	2	2	2	2		
2	1	120324-55751	SEPARATOR ASSY	1	1	1	1	1	1		
3	2	120324-55760	ELEMENT	1	1	1	1	1	1		
4	2	X2740134002	COVER ASSY	1	1	1	1	1	1		
6	2	X0582810173	GASKET	1	1	1	1	1	1		
7	2	X0311121522	BOLT	1	1	1	1	1	1		
8	2	X0580121073	O-RING, 1A P 12.0	1	1	1	1	1	1		
9	2	X0300120414	SEAT, SPRING	1	1	1	1	1	1		
10	2	X0600160122	SPRING	1	1	1	1	1	1		
11	2	X0314080110	PLUG	1	1	1	1	1	1		
12	2	X0588080273	WASHER	2	2	2	2	2	2		
13	2	X0313080922	BOLT	1	1	1	1	1	1		
14	2	X0993071171	LABEL, CAUTION	1	1	1	1	1	1		
15	1	123672-55811	BRACKET	1	1	1	1	1	1		
16	1	123325-59420	PIPE ASSY, FUEL	2	2	2	2	2	2		
17	1	22137-080000	WASHER, 8	2	2	2	2	2	2		
18	1	22217-080000	WASHER, SPRING 8	2	2	2	2	2	2		
19	1	23414-140000	GASKET, 14X1.0	4	4	4	4	4	4		
20	1	23857-080000	BOLT, JOINT 8	2	2	2	2	2	2		
21	1	26106-080402	BOLT, M8X 40 PLATED	2	2	2	2	2	2		
22	1	26106-100202	BOLT, M10X 20 PLATED	2	2	2	2	2	2		
23	1	26306-080002	NUT, M8	2	2	2	2	2	2		
24	1	26706-100002	NUT, M10	2	2	2	2	2	2		

N:Old $\xleftarrow[\text{No}]{\text{Yes}}$ New, Q:Old $\xleftarrow[\text{Yes}]{\text{No}}$ New, R:Old $\xleftarrow[\text{Yes}]{\text{Yes}}$ New, S:Old $\xleftarrow[\text{No}]{\text{No}}$ New, W:Add, Z:Discontinued, F:Interchangeable by set, K:Q'ty Change

Copyright (C) YANMAR CO., LTD. All RightsReserved.

Fig.50. GLOW PLUG

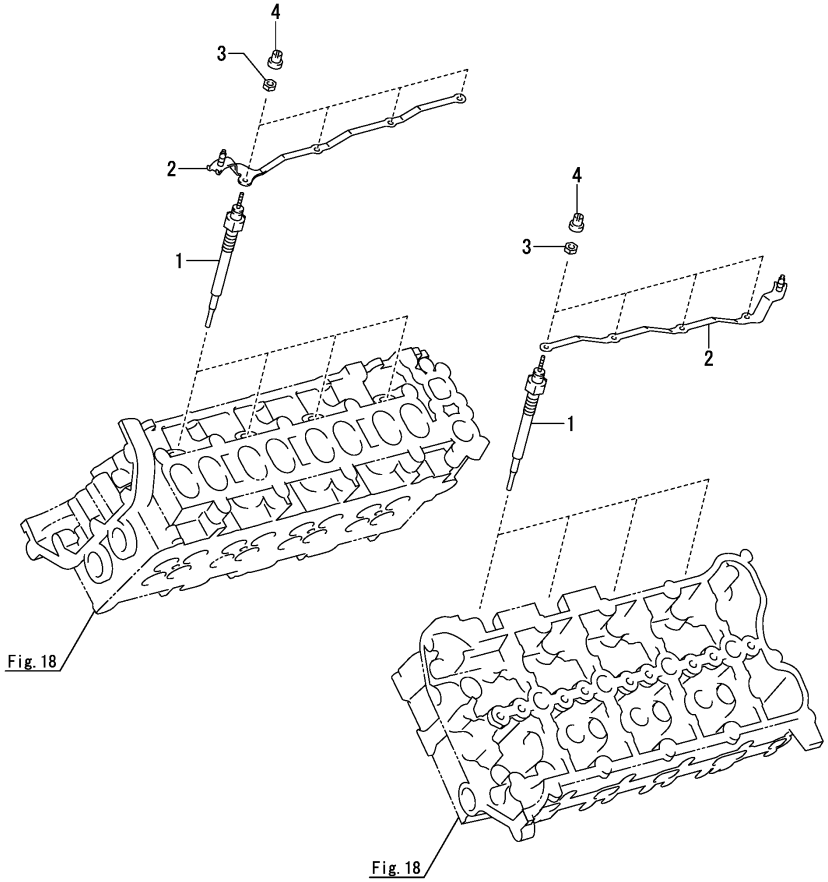

(A)=8LV320 (B)=8LV350 (C)=8LV370 (D)=8LV320Z (E)=8LV350Z (F)=8LV370Z

No.	Lev.	Parts No.	Description	Q'ty (A)	(B)	(C)	(D)	(E)	(F)	I	R
1	1	119798-77910	PLUG ASSY, GLOW	8	8	8	8	8	8		
2	1	119798-77920	CONNECTOR	2	2	2	2	2	2		
3	1	119798-77930	NUT, M4	8	8	8	8	8	8		
4	1	119770-90880	CLAMP	8	8	8	8	8	8		

N:Old $\xleftrightarrow[\text{No}]{\text{Yes}}$ New, Q:Old $\xleftrightarrow[\text{Yes}]{\text{No}}$ New, R:Old $\xleftrightarrow[\text{Yes}]{\text{Yes}}$ New, S:Old $\xleftrightarrow[\text{No}]{\text{No}}$ New, W:Add, Z:Discontinued, F:Interchangeable by set, K:Q'ty Change

Copyright (C) YANMAR CO., LTD. All RightsReserved.

Fig.51. POWER STEERING PUMP

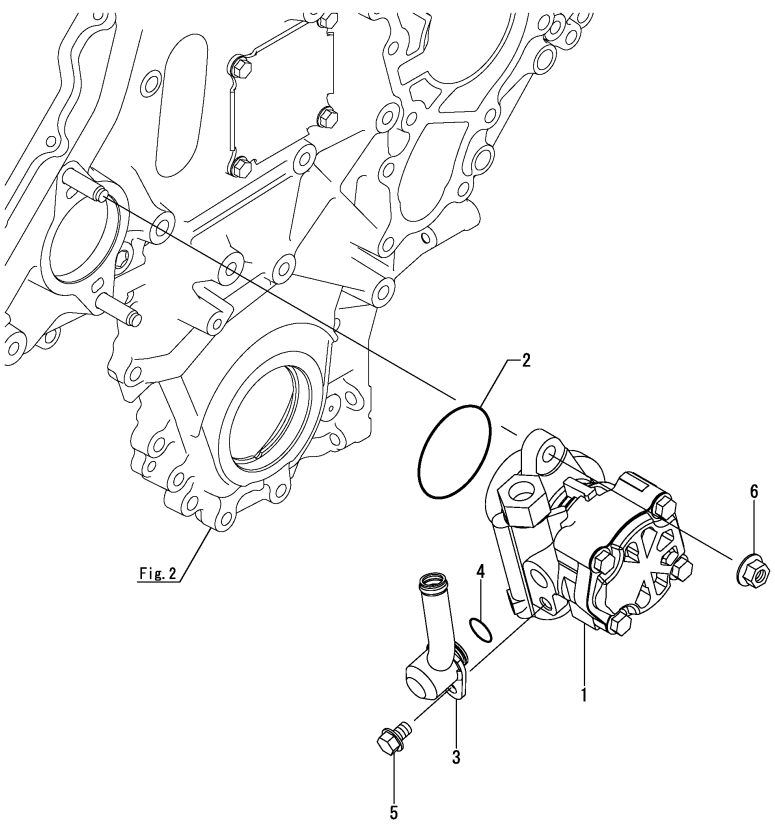

(A)=8LV320 (D)=8LV320Z
(B)=8LV350 (E)=8LV350Z
(C)=8LV370 (F)=8LV370Z

No.	Lev.	Parts No.	Description	Q'ty (A)	(B)	(C)	(D)	(E)	(F)	I	R
1	1	119799-26100	PUMP ASSY,VANE	1	1	1	1	1	1	W	
	(A=EXXXXX)	(B=EXXXXX)	(C=EXXXXX)								
2	1	119799-26110	RING,O	1	1	1	1	1	1		
3	1	119799-26200	JOINT, PUMP				1	1	1		
3-1	1	119799-26210	JOINT	1	1	1	1	1	1	R	
			(D=EXXXXX)	(E=EXXXXX)			(F=EXXXXX)				
4	1	24351-190160	O-RING, 1A19016	1	1	1	1	1	1		
5	1	26106-080122	BOLT, M8X 12 PLATED	1	1	1	1	1	1		
6	1	26376-100002	NUT, M10	2	2	2	2	2	2		

Remarks
*8LV320,8LV350,8LV370 are optional parts.
From 2012/09.

N:Old $\xleftrightarrow[\text{No}]{\text{Yes}}$ New, Q:Old $\xleftrightarrow[\text{Yes}]{\text{No}}$ New, R:Old $\xleftrightarrow[\text{Yes}]{\text{Yes}}$ New, S:Old $\xleftrightarrow[\text{No}]{\text{No}}$ New, W:Add, Z:Discontinued, F:Interchangeable by set, K:Q'ty Change

Copyright (C) YANMAR CO., LTD. All RightsReserved.

Fig.52. POWER STEERING COOLER & TANK

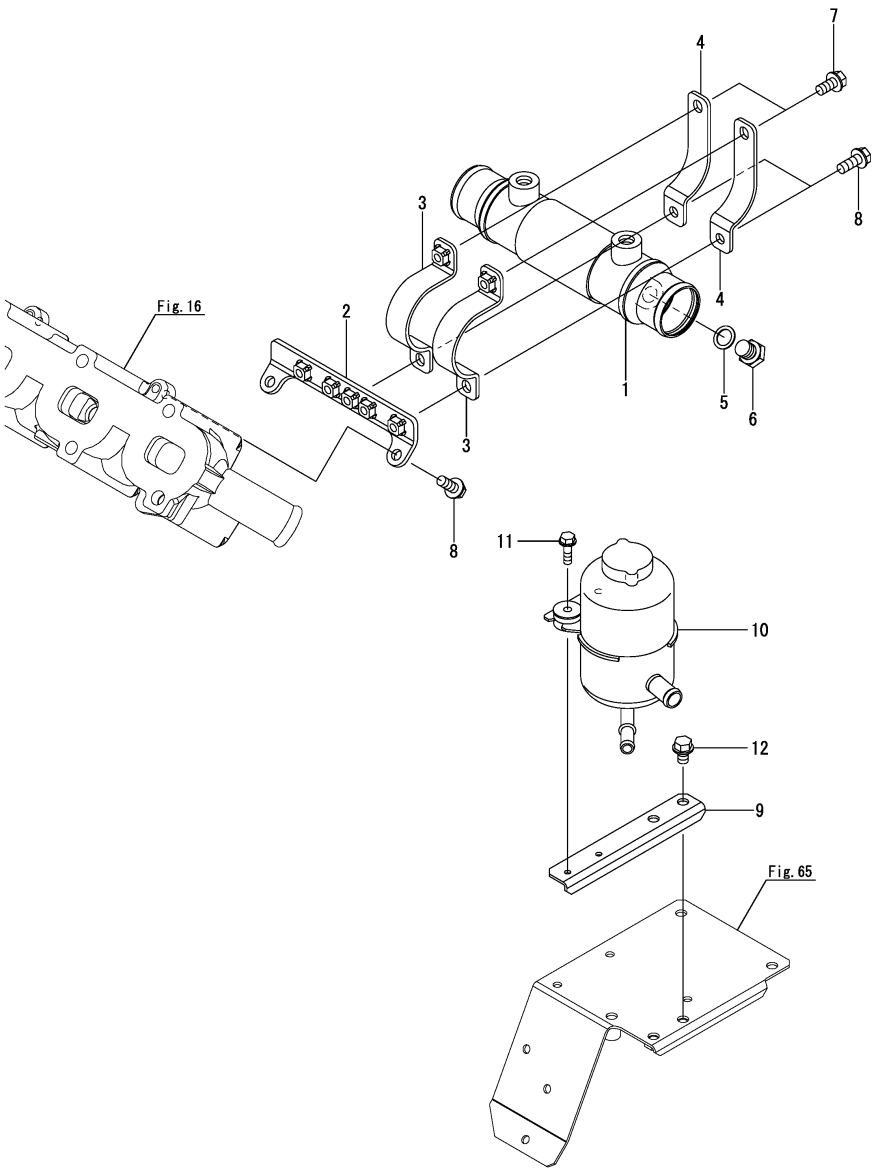

(A)=8LV320 (D)=8LV320Z
(B)=8LV350 (E)=8LV350Z
(C)=8LV370 (F)=8LV370Z

No.	Lev.	Parts No.	Description	Q'ty (A)	(B)	(C)	(D)	(E)	(F)	I	R
1	1	119799-26800	COOLER ASSY, OIL	1	1	1	1	1	1	W	
	(A=EXXXXX)	(B=EXXXXX)	(C=EXXXXX)								
2	1	119798-55720	BRACKET	1	1	1	1	1	1		
3	1	119798-55770	BAND, COOLER	2	2	2	2	2	2		
4	1	119798-55780	BAND, COOLER	2	2	2	2	2	2		
5	1	23414-130000	GASKET, 13X1.0	1	1	1	1	1	1		
6	1	23894-020002	PLUG, G1/4	1	1	1	1	1	1		
7	1	26106-080162	BOLT, M8X 16 PLATED	2	2	2	2	2	2		
8	1	26106-080202	BOLT, M8X 20 PLATED	4	4	4	4	4	4		
9	1	119799-26530	BRACKET	1	1	1	1	1	1		
10	1	196346-34860	TANK, OIL	1	1	1	1	1	1		
11	1	26106-060202	BOLT, M6X 20 PLATED	2	2	2	2	2	2		
12	1	26106-080122	BOLT, M8X 12 PLATED	2	2	2	2	2	2		

Remarks
*8LV320,8LV350,8LV370 are optional parts.
From 2012/09.

N:Old ◄Yes/No► New, Q:Old ◄No/Yes► New, R:Old ◄Yes/Yes► New, S:Old ◄No/No► New, W:Add, Z:Discontinued, F:Interchangeable by set, K:Q'ty Change

Copyright (C) YANMAR CO., LTD. All RightsReserved.

Fig.53. POWER STEERING PIPE

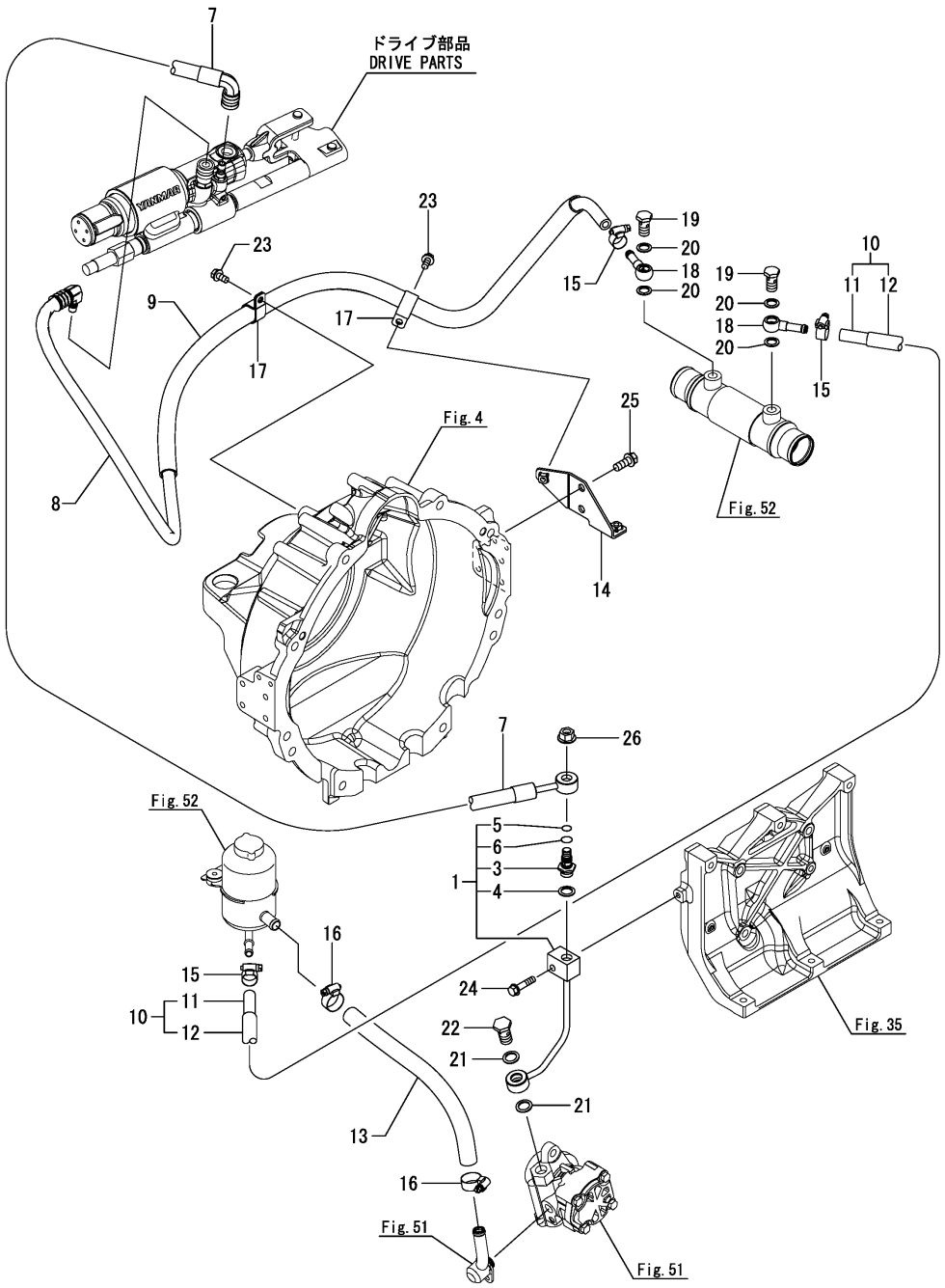

(A)=8LV320 (B)=8LV350 (C)=8LV370 (D)=8LV320Z (E)=8LV350Z (F)=8LV370Z

No.	Lev.	Parts No.	Description	Q'ty (A)	(B)	(C)	(D)	(E)	(F)	I	R
1	1	119799-26150	PIPE ASSY, JOINT				1	1	1		
3	2	119799-26170	BOLT				1	1	1		
4	2	22190-160006	WASHER, SEAL 16				1	1	1		
5	2	24356-190110	PACKING, 19011				1	1	1		
6	2	24356-190130	O-RING, 4D19013				1	1	1		
7	1	119778-26401	PIPE, AIR				1	1	1		
8	1	119778-26411	PIPE, AIR				1	1	1		
9	1	119799-26520	TUBE, CORRUGATED				1	1	1		
10	1	119799-26540	HOSE ASSY				1	1	1		
11	2	119799-26550	HOSE, ATF 10				1	1	1		
12	2	119799-26600	COVER				1	1	1		
13	1	119799-26570	HOSE, ATF 16				1	1	1		
14	1	119799-26580	BRACKET				1	1	1		
15	1	119172-48190	CLIP, HOSE 19				3	3	3		
16	1	119172-48250	CLIP, HOSE 25				2	2	2		
17	1	121575-49310	RETAINER, PIPE				2	2	2		
18	1	119799-59210	JOINT, PIPE				2	2	2		
19	1	148616-59430	BOLT, M14X26				2	2	2		
20	1	22190-140006	WASHER, SEAL 14				4	4	4		
21	1	22190-160006	WASHER, SEAL 16				2	2	2		
22	1	23857-100000	BOLT, JOINT 10				1	1	1		
23	1	26106-080162	BOLT, M8X 16 PLATED				2	2	2		
24	1	26106-080352	BOLT, M8X 35 PLATED				1	1	1		
25	1	26106-100252	BOLT, M10X 25 PLATED				2	2	2		
26	1	26376-120002	NUT, M12				1	1	1		

N:Old ←Yes/No→ New, Q:Old ←No/Yes→ New, R:Old ←Yes/Yes→ New, S:Old ←No/No→ New, W:Add, Z:Discontinued, F:Interchangeable by set, K:Q'ty Change

Copyright (C) YANMAR CO., LTD. All RightsReserved.

Fig.71. (53A)POWER STEERING PIPE(FROM 2012/09)(OPTIONAL)

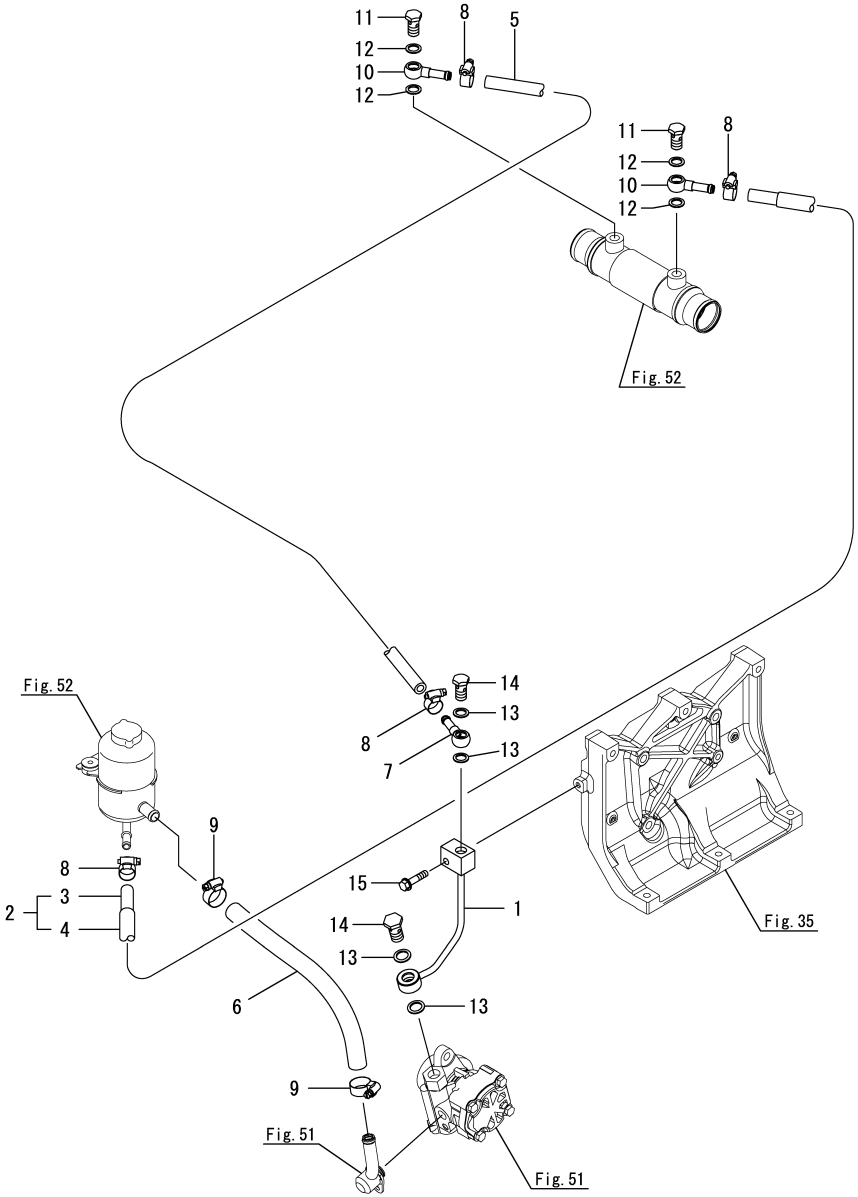

(A)=8LV320 (D)=8LV320Z
(B)=8LV350 (E)=8LV350Z
(C)=8LV370 (F)=8LV370Z

No.	Lev.	Parts No.	Description	Q'ty (A)	(B)	(C)	(D)	(E)	(F)	I	R
1	1	119799-26160	PIPE, ATF JOINT	1	1	1					
2	1	119799-26540	HOSE ASSY	1	1	1				W	
	(A=EXXXXX)	(B=EXXXXX)	(C=EXXXXX)								
3	2	119799-26550	HOSE, ATF 10	1	1	1					
4	2	119799-26600	COVER	1	1	1					
5	1	119799-26550	HOSE, ATF 10	1	1	1					
6	1	119799-26570	HOSE, ATF 16	1	1	1					
7	1	119798-26800	JOINT, ATF	1	1	1					
8	1	119172-48190	CLIP, HOSE 19	4	4	4					
9	1	119172-48250	CLIP, HOSE 25	2	2	2					
10	1	119799-59250	JOINT	2	2	2					
11	1	148616-59430	BOLT, M14X26	2	2	2					
12	1	22190-140006	WASHER, SEAL 14	4	4	4					
13	1	22190-160006	WASHER, SEAL 16	4	4	4					
14	1	23857-100000	BOLT, JOINT 10	2	2	2					
15	1	26106-080402	BOLT, M8X 40 PLATED	1	1	1					

N:Old $\xleftrightarrow[\text{No}]{\text{Yes}}$ New, Q:Old $\xleftrightarrow[\text{Yes}]{\text{No}}$ New, R:Old $\xleftrightarrow[\text{Yes}]{\text{Yes}}$ New, S:Old $\xleftrightarrow[\text{No}]{\text{No}}$ New, W:Add, Z:Discontinued, F:Interchangeable by set, K:Q'ty Change

Copyright (C) YANMAR CO., LTD. All RightsReserved.

Fig.54. CLUTCH

(A)=8LV320 (B)=8LV350 (C)=8LV370 (D)=8LV320Z (E)=8LV350Z (F)=8LV370Z

No.	Lev.	Parts No.	Description	Q'ty (A)	(B)	(C)	(D)	(E)	(F)	I	R
1	1	119798-81110	CLUTCH ASSY, 2.43M	1	1	1					1
2	1	119798-81120	CLUTCH ASSY, 2.13M	1	1	1					2
3	1	119798-81130	CLUTCH ASSY, 1.67M	1	1	1					3
4	1	119798-81160	CLUTCH ASSY, 2.43E	1	1	1					4
5	1	119798-81170	CLUTCH ASSY, 2.13E	1	1	1					5
6	1	119798-81180	CLUTCH ASSY, 1.67E	1	1	1					6
7	1	119798-81210	CLUTCH ASSY, I=2.47M	1	1	1					7
8	1	119798-81220	CLUTCH ASSY, 2.08M	1	1	1					8
9	1	119798-81230	CLUTCH ASSY, 1.58M	1	1	1					9
10	1	119798-81240	CLUTCH ASSY, 1.22M	1	1	1					A
11	1	119798-81260	CLUTCH ASSY, I=2.47E	1	1	1					B
12	1	119798-81270	CLUTCH ASSY, 2.08E	1	1	1					C
13	1	119798-81280	CLUTCH ASSY, 1.58E	1	1	1					D
14	1	119798-81290	CLUTCH ASSY, 1.22E	1	1	1					E

Remarks
*This figure are not illustrated.
(1)KMH50A i=2.43 Wire remo-con type
(2)KMH50A i=2.13 Wire remo-con type
(3)KMH50A i=1.67 Wire remo-con type
(4)KMH50A i=2.43 Magnetic type
(5)KMH50A i=2.13 Magnetic type
(6)KMH50A i=1.67 Magnetic type
(7)KMH52V i=2.47 Wire remo-con type
(8)KMH52V i=2.08 Wire remo-con type
(9)KMH52V i=1.58 Wire remo-con type
(A)KMH52V i=1.22 Wire remo-con type
(B)KMH52V i=2.47 Magnetic type
(C)KMH52V i=2.08 Magnetic type
(D)KMH52V i=1.58 Magnetic type
(E)KMH52V i=1.22 Magnetic type

N:Old $\xleftarrow[\text{No}]{\text{Yes}}$ New, Q:Old $\xleftarrow[\text{Yes}]{\text{No}}$ New, R:Old $\xleftarrow[\text{Yes}]{\text{Yes}}$ New, S:Old $\xleftarrow[\text{No}]{\text{No}}$ New, W:Add, Z:Discontinued, F:Interchangeable by set, K:Q'ty Change

Copyright (C) YANMAR CO., LTD. All RightsReserved.

Fig.55. P.T.O.FLANGE(OPTIONAL)

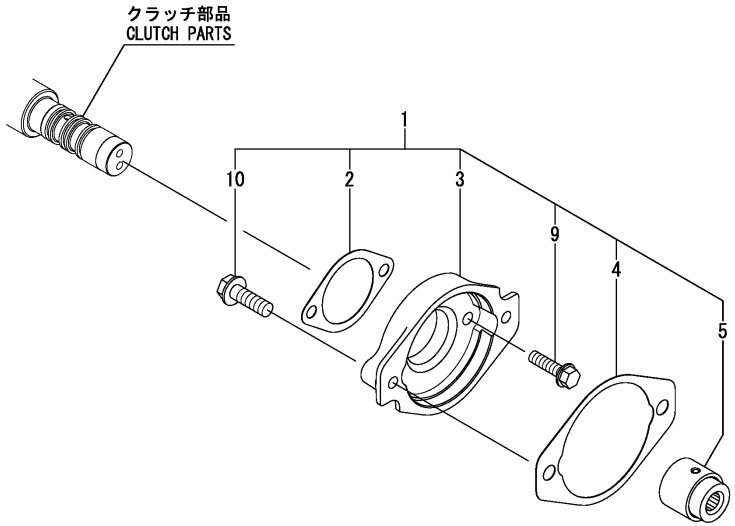

(A)=8LV320 (B)=8LV350 (C)=8LV370 (D)=8LV320Z (E)=8LV350Z (F)=8LV370Z

No.	Lev.	Parts No.	Description	Q'ty (A)	(B)	(C)	(D)	(E)	(F)	I	R
1	1	777524-02121	FLANGE KIT, PTO	1	1	1					
2	2	177524-02210	GASKET, COVER	1	1	1					
3	2	177524-02221	FLANGE, SAE#A	1	1	1					
4	2	177524-02230	GASKET	1	1	1					
5	2	177524-03701	SLEEVE ASSY, SPLINE	1	1	1					
9	2	26106-080302	BOLT, M8X 30 PLATED	2	2	2					
10	2	26106-100352	BOLT, M10X 35 PLATED	2	2	2					

N:Old $\xleftrightarrow[\text{No}]{\text{Yes}}$ New, Q:Old $\xleftrightarrow[\text{Yes}]{\text{No}}$ New, R:Old $\xleftrightarrow[\text{Yes}]{\text{Yes}}$ New, S:Old $\xleftrightarrow[\text{No}]{\text{No}}$ New, W:Add, Z:Discontinued, F:Interchangeable by set, K:Q'ty Change

Copyright (C) YANMAR CO., LTD. All RightsReserved.

Fig.56. TROLLING VALVE(A2/OPTIONAL)

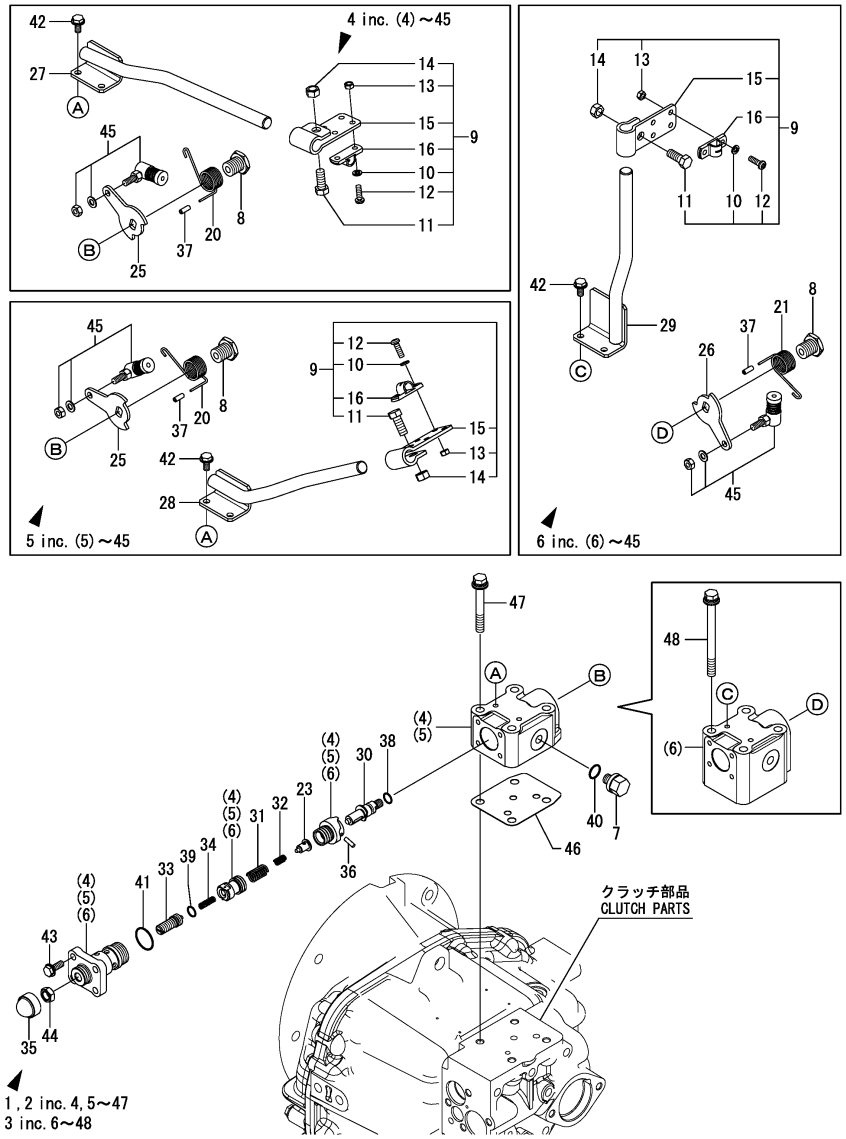

(A)=8LV320 (D)=8LV320Z
(B)=8LV350 (E)=8LV350Z
(C)=8LV370 (F)=8LV370Z

No.	Lev.	Parts No.	Description	Q'ty (A)	(B)	(C)	(D)	(E)	(F)	I	R
1	1	777524-04430	VALVE KIT, TROLLING	1	1	1					1
2	1	777524-04440	VALVE KIT, TROLLING	1	1	1					1
3	1	777524-04460	VALVE KIT, TROLLING	1	1	1					1
4	2	177524-04481	VALVE ASSY, TROLLING	1	1	1					
5	2	177524-04491	VALVE ASSY, TROLLING	1	1	1					
6	2	177524-04471	VALVE ASSY, TROLLING	1	1	1					
7	3	177524-04420	PLUG, M10X1.0	1	1	1					
8	3	177068-04481	NUT	1	1	1					
9	3	177061-04490	BRACKET ASSY, CABLE	1	1	1					
10	4	22212-050000	WASHER 5	2	2	2					
11	4	26116-080202	BOLT, M8X 20 PLATED	1	1	1					
12	4	26557-050162	SCREW, M5X16	2	2	2					
13	4	26716-050002	NUT, M5	2	2	2					
14	4	26716-080002	NUT, M8	1	1	1					
15	4	41701-001720	BRACKET	1	1	1					
16	4	41710-000410	CLAMP	1	1	1					
20	3	177524-04540	SPRING, RETURN	1	1	1					2
21	3	177068-04492	SPRING, RETURN	1	1	1					3
23	3	177524-04552	SPACER, TROLLING	1	1	1					
25	3	177510-04560	LEVER, TROLLING	1	1	1					2
26	3	177524-04720	LEVER, TROLLING	1	1	1					3
27	3	177524-04560	BRACKET, WIRE L7.5	1	1	1					4
28	3	177524-04570	BRACKET, WIRE L37.5	1	1	1					5
29	3	177524-04590	BRACKET, WIRE L87.5	1	1	1					3
30	3	177040-04571	SHAFT, LEVER	1	1	1					
31	3	177524-04620	SPRING, VALVE	1	1	1					
32	3	177524-04630	SPRING, VALVE	1	1	1					
33	3	177057-04620	SCREW	1	1	1					
34	3	177040-04630	SPRING	1	1	1					
35	3	177040-04640	COVER	1	1	1					
36	3	22312-040100	PARALLEL PIN 4X10	1	1	1					
37	3	22351-040012	PIN, SPRING 4.0X12	1	1	1					
38	3	24311-000090	O-RING, 1AP9.0	1	1	1					
39	3	24311-000090	O-RING, 1AP9.0	1	1	1					
40	3	24311-000120	O-RING, 1AP12.0	1	1	1					
41	3	24311-000210	O-RING, 1AP21.0	1	1	1					
42	3	26106-060122	BOLT, M6X 12 PLATED	2	2	2					
43	3	26106-060162	BOLT, M6X 16 PLATED	4	4	4					
44	3	26776-100002	NUT, LOCK M10	1	1	1					
45	3	41710-000790	JOINT	1	1	1					
46	2	177524-04531	GASKET, TROLLING	1	1	1					
47	2	26016-080602	BOLT, M8X 60	4	4	4					2
48	2	26016-080802	BOLT, M8X 80	4	4	4					3

Remarks
(1)No.1,2,3 are different in wiring direction and angle of a cable.
(2)For No.1,2
(3)For No.3
(4)For No.1
(5)For No.2

N:Old $\overset{\text{Yes}}{\underset{\text{No}}{\leftrightarrow}}$ New, Q:Old $\overset{\text{No}}{\underset{\text{Yes}}{\leftrightarrow}}$ New, R:Old $\overset{\text{Yes}}{\underset{\text{Yes}}{\leftrightarrow}}$ New, S:Old $\overset{\text{No}}{\underset{\text{No}}{\leftrightarrow}}$ New, W:Add, Z:Discontinued, F:Interchangeable by set, K:Q'ty Change

Copyright (C) YANMAR CO., LTD. All RightsReserved.

Fig.57. ELECTRONIC TROLLING(TYPE-E/OPTIONAL)

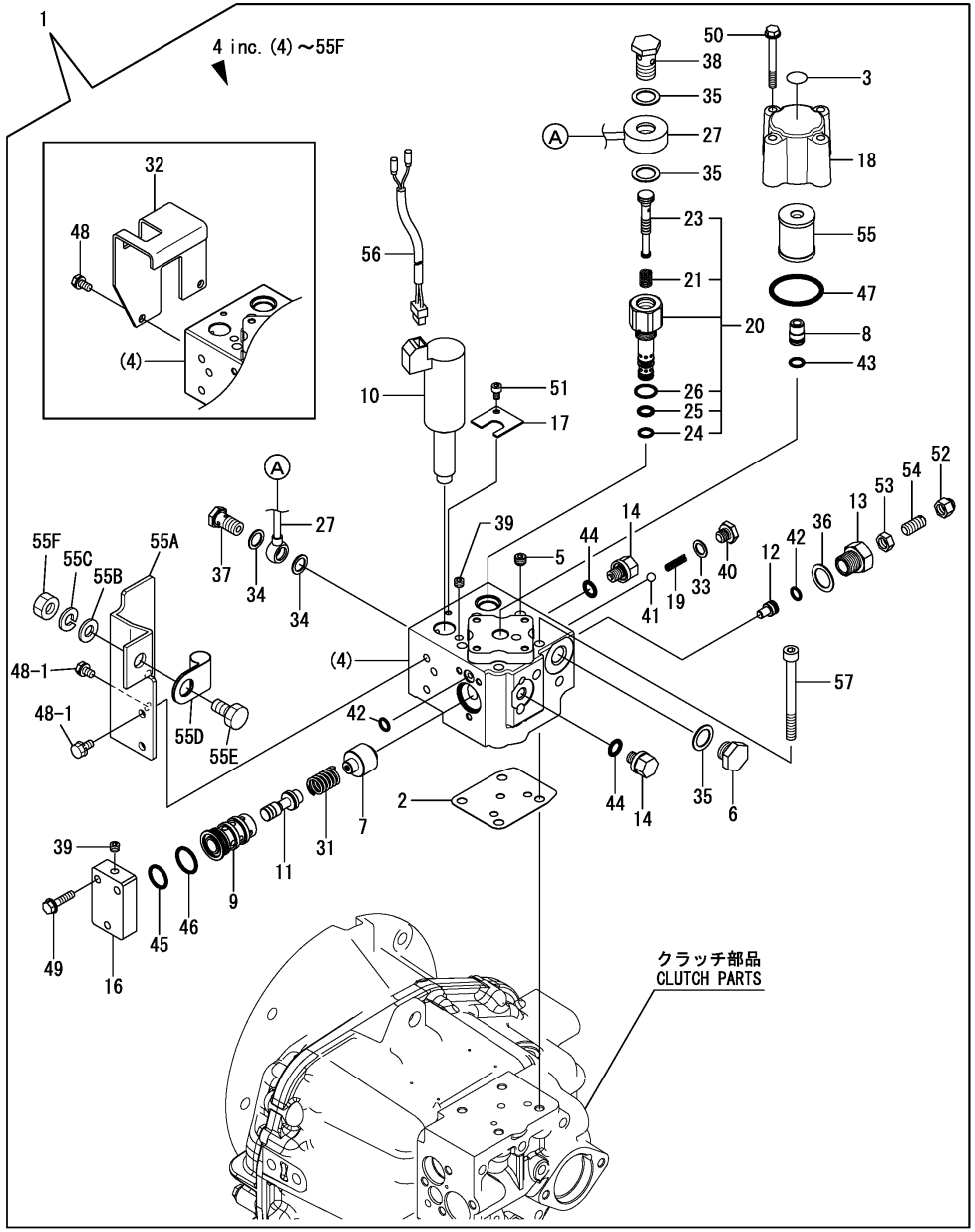

(A)=8LV320 (D)=8LV320Z
(B)=8LV350 (E)=8LV350Z
(C)=8LV370 (F)=8LV370Z

No.	Lev.	Parts No.	Description	Q'ty (A)	(B)	(C)	(D)	(E)	(F)	I	R
1	1	777522-04712	TROLLING KIT	1	1	1					
1-1	1	777522-04713	TROLLING KIT,TYPE-E	1	1	1				N	
	(A=CXXXXX)	(B=CXXXXX)	(C=CXXXXX)								
2	2	177524-04531	GASKET, TROLLING	1	1	1					
3	2	177523-02911	STICKER, STRAINER	1	1	1					
4	2	177523-04502	VALVE ASSY, TROLLING	1	1	1					
4-1	2	177523-04503	VALVE ASSY, E-TYPE	1	1	1				N	
	(A=CXXXXX)	(B=CXXXXX)	(C=CXXXXX)								
5	3	124060-01050	PLUG, PT1/8	8	8	8					
6	3	177035-02920	PLUG, MAGNET M16X1.5	1	1	1					
7	3	177503-04183	VALVE, TROLLING	1	1	1					
8	3	177503-04200	PIPE, WATER	1	1	1					
9	3	177523-04250	SLEEVE, VALVE	1	1	1					
10	3	177503-04260	VALVE ASSY	1	1	1					
11	3	177523-04260	VALVE, TROLLING	1	1	1					
12	3	177068-04370	COVER	1	1	1					
13	3	177068-04380	PLUG	1	1	1					
14	3	177524-04420	PLUG, M10X1.0	2	2	2					
16	3	177523-04520	COVER	1	1	1					
17	3	177523-04530	BRACKET, VALVE	1	1	1					
18	3	177523-04540	CASE, STRAINER	1	1	1					
19	3	177040-04630	SPRING	1	1	1					
20	3	177523-04640	VALVE ASSY	1	1	1					
21	4	177523-04650	SPRING, VALVE	1	1	1					
23	4	177523-04670	VALVE, CONNECTING	1	1	1					
24	4	24311-000100	O-RING, 1AP10.0	1	1	1					
25	4	24311-240100	O-RING, 1AP10A	1	1	1					
26	4	24351-190160	O-RING, 1A19016	1	1	1					
27	3	177523-04690	PIPE ASSY, VALVE	1	1	1					
31	3	177068-04871	SPRING, NO.3	1	1	1					
32	3	177523-04870	COVER	1	1	1				Z	
	(A=CXXXXX)	(B=CXXXXX)	(C=CXXXXX)								
33	3	23414-100000	GASKET, 10X1.0	1	1	1					
34	3	23414-120000	GASKET, 12X1.0	2	2	2					
35	3	23414-160000	GASKET, 16X1.0	3	3	3					
36	3	23414-180000	GASKET, 18X1.0	1	1	1					
37	3	23857-060000	BOLT, JOINT 6	1	1	1					
38	3	23857-100000	BOLT, JOINT 10	1	1	1					
39	3	194555-77120	PLUG, 1/16	12	12	12					
40	3	23887-100002	PLUG, 10	1	1	1					
41	3	24190-090001	BALL, STEEL 9/32	1	1	1					
42	3	24311-000090	O-RING, 1AP9.0	2	2	2					
43	3	24311-000100	O-RING, 1AP10.0	1	1	1					
44	3	24311-000120	O-RING, 1AP12.0	2	2	2					
45	3	24311-000180	O-RING, 1AP18.0	1	1	1					
46	3	24311-000210	O-RING, 1AP21.0	1	1	1					
47	3	24321-000400	O-RING, 1AG40.0	1	1	1					
48	3	26013-060102	BOLT, M6X 10	2	2	2					
48-1	3	26013-060102	BOLT, M6X 10	4	4	4				K	
	(A=CXXXXX)	(B=CXXXXX)	(C=CXXXXX)								
49	3	26106-060252	BOLT, M6X 25 PLATED	3	3	3					

N:Old $\overset{\text{Yes}}{\underset{\text{No}}{\leftrightarrow}}$ New, Q:Old $\overset{\text{No}}{\underset{\text{Yes}}{\leftrightarrow}}$ New, R:Old $\overset{\text{Yes}}{\underset{\text{Yes}}{\leftrightarrow}}$ New, S:Old $\overset{\text{No}}{\underset{\text{No}}{\leftrightarrow}}$ New, W:Add, Z:Discontinued, F:Interchangeable by set, K:Q'ty Change

++ CONTINUE ++

Copyright (C) YANMAR CO., LTD. All RightsReserved.

Fig.57. ELECTRONIC TROLLING(TYPE-E/OPTIONAL)

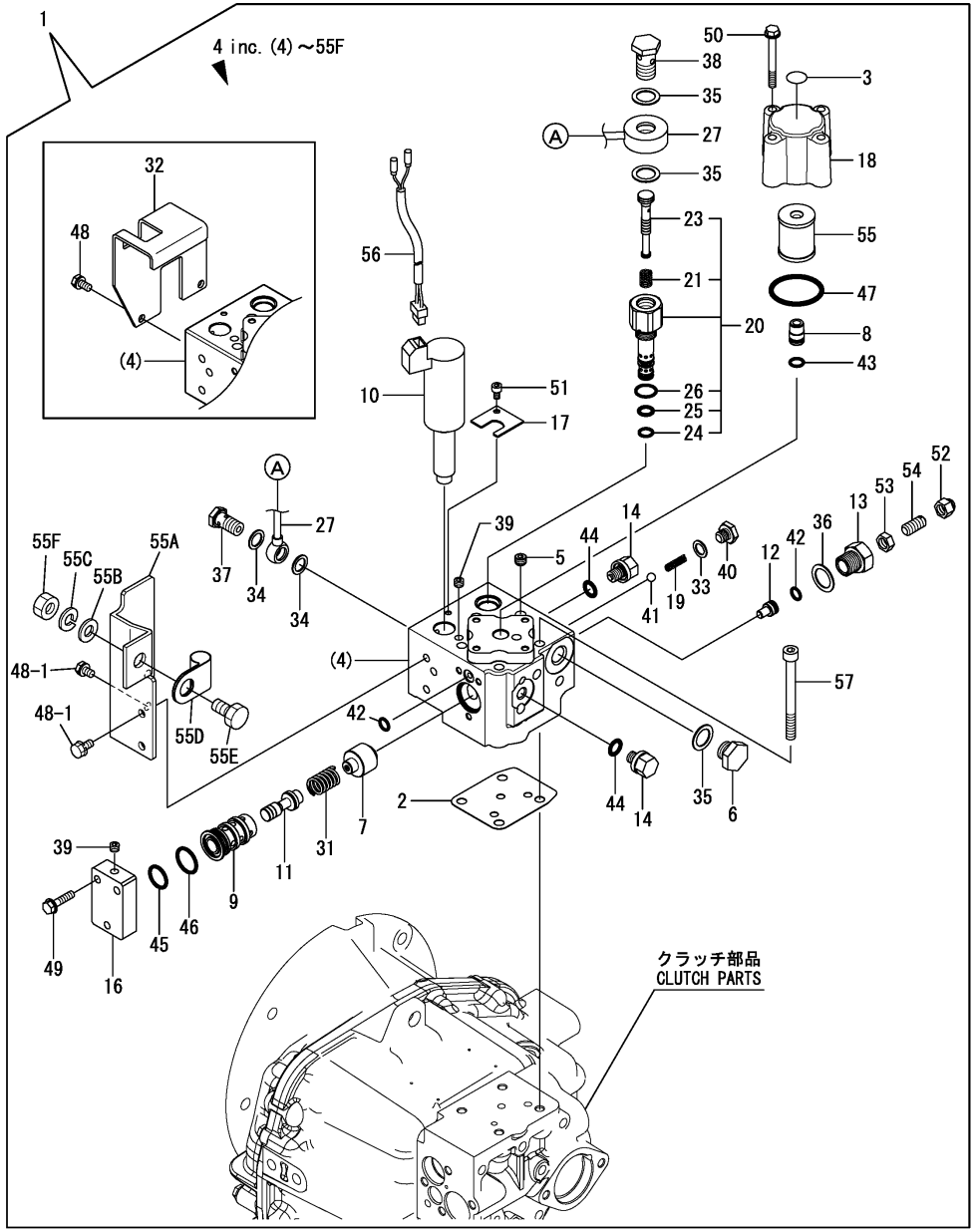

(A)=8LV320 (D)=8LV320Z
(B)=8LV350 (E)=8LV350Z
(C)=8LV370 (F)=8LV370Z

No.	Lev.	Parts No.	Description	Q'ty (A)	(B)	(C)	(D)	(E)	(F)	I	R
50	3	26106-060552	BOLT, M6X 55 PLATED	4	4	4					
51	3	26450-050082	BOLT, M5X 8	1	1	1					
52	3	26657-100002	NUT, CAP M10	1	1	1					
53	3	26756-100002	NUT, LOCK M10	1	1	1					
54	3	26911-100222	SCREW, M10X22	1	1	1					
55	3	177129-04830	ELEMENT	1	1	1					
55A	3	177523-04880	BRACKET,SOL	1	1	1				W	
	(A=CXXXXX)	(B=CXXXXX)	(C=CXXXXX)								
55B	3	22117-100000	WASHER, 10	1	1	1				W	
	(A=CXXXXX)	(B=CXXXXX)	(C=CXXXXX)								
55C	3	22217-100000	WASHER, SPRING 10	1	1	1				W	
	(A=CXXXXX)	(B=CXXXXX)	(C=CXXXXX)								
55D	3	23297-350121	CLAMP, A35X12	1	1	1				W	
	(A=CXXXXX)	(B=CXXXXX)	(C=CXXXXX)								
55E	3	26116-100202	BOLT, M10X 20 PLATED	1	1	1				W	
	(A=CXXXXX)	(B=CXXXXX)	(C=CXXXXX)								
55F	3	26716-100002	NUT, M10	1	1	1				W	
	(A=CXXXXX)	(B=CXXXXX)	(C=CXXXXX)								
56	2	177523-04610	CONNECTOR, VALVE	1	1	1					
57	2	26450-080952	BOLT, M8X 95	4	4	4					

N:Old ←Yes/No→ New, Q:Old ←No/Yes→ New, R:Old ←Yes/Yes→ New, S:Old ←No/No→ New, W:Add, Z:Discontinued, F:Interchangeable by set, K:Q'ty Change

Copyright (C) YANMAR CO., LTD. All RightsReserved.

Fig.58. ELECTRONIC TROLLING(TYPE-C/OPTIONAL)

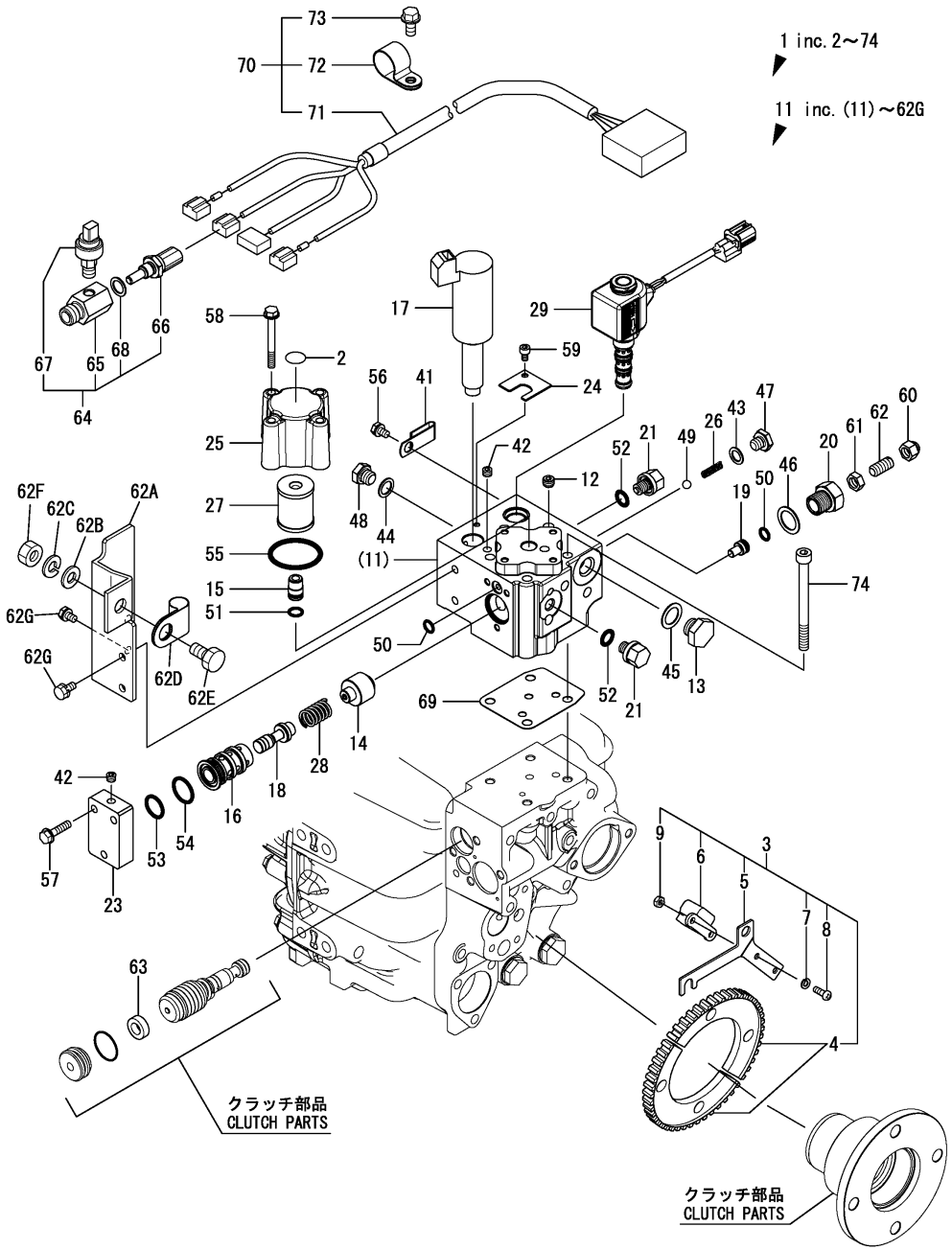

(A)=8LV320 (B)=8LV350 (C)=8LV370 (D)=8LV320Z (E)=8LV350Z (F)=8LV370Z

No.	Lev.	Parts No.	Description	Q'ty (A)	(B)	(C)	(D)	(E)	(F)	I	R
1	1	777523-04810	TROLLING KIT	1	1	1					
1-1	1	777523-04811	TROLLING C KIT,DECU	1	1	1				N	
	(A=CXXXXX)	(B=CXXXXX)	(C=CXXXXX)								
2	2	177523-02911	STICKER, STRAINER	1	1	1					
3	2	177523-04100	TROLLING ASSY	1	1	1					
4	3	177523-03800	GEAR, SENSOR Z=68	2	2	2					
5	3	177523-04110	BRACKET, SENSOR	1	1	1					
6	3	177129-04690	SENSOR	1	1	1					
7	3	22217-040000	WASHER, SPRING 4	2	2	2					
8	3	26557-040122	SCREW, M4X12	2	2	2					
9	3	26716-040002	NUT, M4	2	2	2					
11	2	177523-04401	VALVE ASSY, TROLLING	1	1	1					
11-1	2	177523-04402	VALVE ASSY, TROLLING	1	1	1				N	
	(A=CXXXXX)	(B=CXXXXX)	(C=CXXXXX)								
11-2	2	177523-04403	VALVE ASSY, C-TYPE	1	1	1				N	
	(A=CXXXXX)	(B=CXXXXX)	(C=CXXXXX)								
12	3	124060-01050	PLUG, PT1/8	8	8	8					
13	3	177035-02920	PLUG, MAGNET M16X1.5	1	1	1					
14	3	177503-04183	VALVE, TROLLING	1	1	1					
15	3	177503-04200	PIPE, WATER	1	1	1					
16	3	177503-04211	SLEEVE, VALVE	1	1	1					
16-1	3	177523-04350	SLEEVE, VALVE	1	1	1				N	
	(A=CXXXXX)	(B=CXXXXX)	(C=CXXXXX)								
17	3	177503-04260	VALVE ASSY	1	1	1					
18	3	177523-04360	VALVE, TROLLING	1	1	1					
19	3	177068-04370	COVER	1	1	1					
20	3	177068-04380	PLUG	1	1	1					
21	3	177524-04420	PLUG, M10X1.0	2	2	2					
23	3	177523-04520	COVER	1	1	1					
24	3	177523-04530	BRACKET, VALVE	1	1	1					
25	3	177523-04540	CASE, STRAINER	1	1	1					
26	3	177040-04630	SPRING	1	1	1					
27	3	177129-04830	ELEMENT	1	1	1					
28	3	177068-04881	SPRING, NO.4	1	1	1					
29	3	177511-04920	VALVE, SOLENOID	1	1	1					
41	3	194440-51620	CLAMP	1	1	1					
42	3	194555-77120	PLUG, 1/16	12	12	12					
43	3	23414-100000	GASKET, 10X1.0	1	1	1					
44	3	23414-120000	GASKET, 12X1.0	1	1	1					
45	3	23414-160000	GASKET, 16X1.0	1	1	1					
46	3	23414-180000	GASKET, 18X1.0	1	1	1					
47	3	23887-100002	PLUG, 10	1	1	1					
48	3	23887-120002	PLUG, 12	1	1	1					
49	3	24190-090001	BALL, STEEL 9/32	1	1	1					
50	3	24311-000090	O-RING, 1AP9.0	2	2	2					
51	3	24311-000100	O-RING, 1AP10.0	1	1	1					
52	3	24311-000120	O-RING, 1AP12.0	2	2	2					
53	3	24311-000180	O-RING, 1AP18.0	1	1	1					
54	3	24311-000210	O-RING, 1AP21.0	1	1	1					
55	3	24321-000400	O-RING, 1AG40.0	1	1	1					
56	3	26013-060102	BOLT, M6X 10	1	1	1					

N:Old $\overset{\text{Yes}}{\underset{\text{No}}{\leftrightarrows}}$ New, Q:Old $\overset{\text{No}}{\underset{\text{Yes}}{\leftrightarrows}}$ New, R:Old $\overset{\text{Yes}}{\underset{\text{Yes}}{\leftrightarrows}}$ New, S:Old $\overset{\text{No}}{\underset{\text{No}}{\leftrightarrows}}$ New, W:Add, Z:Discontinued, F:Interchangeable by set, K:Q'ty Change

++ CONTINUE ++

Copyright (C) YANMAR CO., LTD. All RightsReserved.

Fig.58. ELECTRONIC TROLLING(TYPE-C/OPTIONAL)

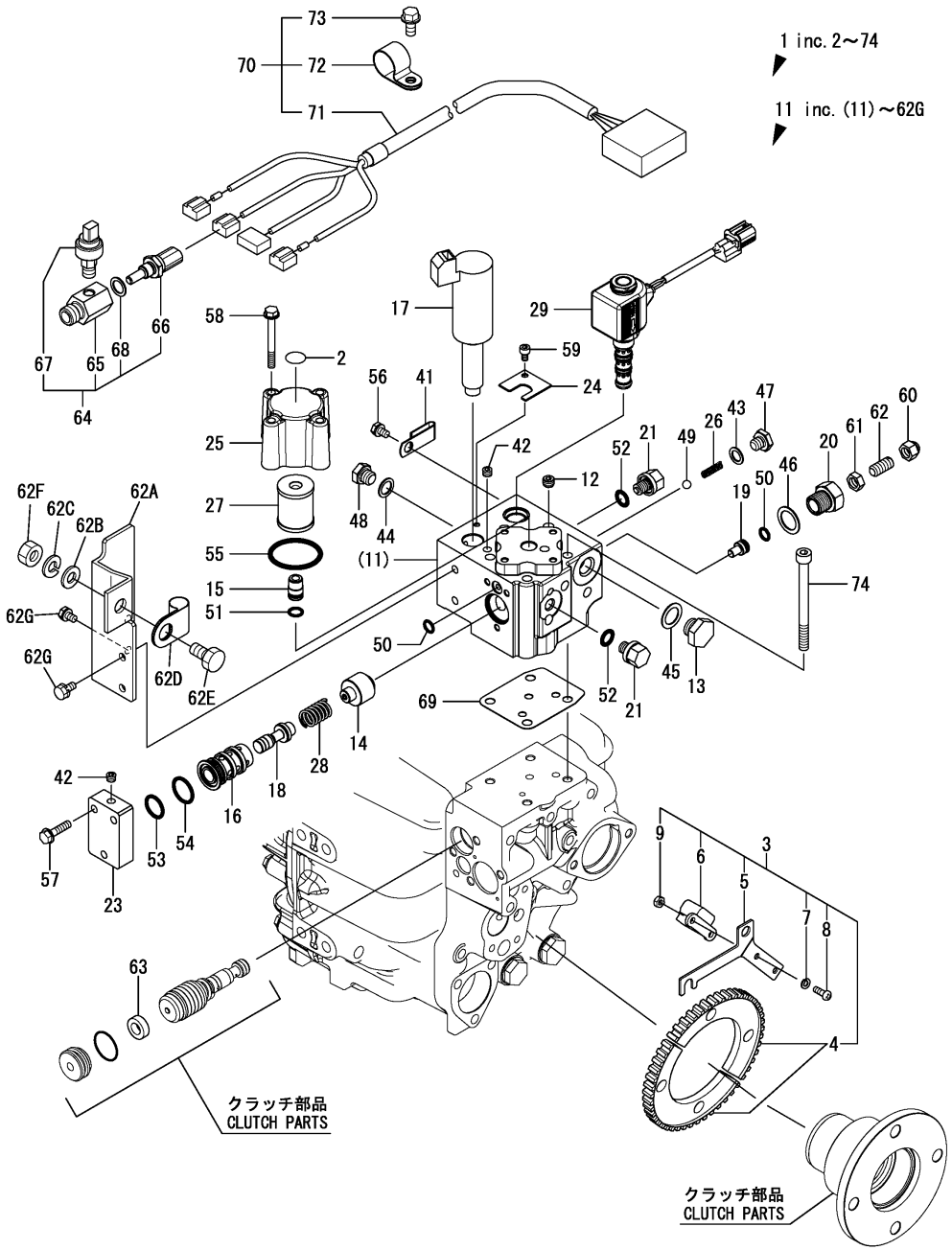

(A)=8LV320 (D)=8LV320Z
(B)=8LV350 (E)=8LV350Z
(C)=8LV370 (F)=8LV370Z

No.	Lev.	Parts No.	Description	Q'ty (A)	(B)	(C)	(D)	(E)	(F)	I	R
57	3	26106-060252	BOLT, M6X 25 PLATED	3	3	3					
58	3	26106-060552	BOLT, M6X 55 PLATED	4	4	4					
59	3	26450-050082	BOLT, M5X 8	1	1	1					
60	3	26657-100002	NUT, CAP M10	1	1	1					
61	3	26756-100002	NUT, LOCK M10	1	1	1					
62	3	26911-100222	SCREW, M10X22	1	1	1					
62A	3	177523-04880	BRACKET,SOL	1	1	1				W	
	(A=CXXXXX)	(B=CXXXXX)	(C=CXXXXX)								
62B	3	22117-100000	WASHER, 10	1	1	1				W	
	(A=CXXXXX)	(B=CXXXXX)	(C=CXXXXX)								
62C	3	22217-100000	WASHER, SPRING 10	1	1	1				W	
	(A=CXXXXX)	(B=CXXXXX)	(C=CXXXXX)								
62D	3	23297-350121	CLAMP, A35X12	1	1	1				W	
	(A=CXXXXX)	(B=CXXXXX)	(C=CXXXXX)								
62E	3	26116-100202	BOLT, M10X 20 PLATED	1	1	1				W	
	(A=CXXXXX)	(B=CXXXXX)	(C=CXXXXX)								
62F	3	26716-100002	NUT, M10	1	1	1				W	
	(A=CXXXXX)	(B=CXXXXX)	(C=CXXXXX)								
62G	3	26013-060102	BOLT, M6X 10	4	4	4				W	
	(A=CXXXXX)	(B=CXXXXX)	(C=CXXXXX)								
63	2	177523-04440	SPACER	1	1	1					
64	2	177523-04460	SENSOR ASSY	1	1	1					
65	3	177523-04430	JOINT, NPTF3/8	1	1	1					
66	3	119254-44910	SENSOR ASSY	1	1	1					
67	3	119578-91300	SENSOR, PRESSURE	1	1	1					
68	3	23414-120000	GASKET, 12X1.0	1	1	1					
69	2	177524-04531	GASKET, TROLLING	1	1	1					
70	2	177523-04580	HARNESS ASSY, WIRE	1	1	1					
71	3	177523-04590	HARNESS, WIRE	1	1	1					
72	3	23297-250081	CLAMP, A27X12	1	1	1					
73	3	26106-080162	BOLT, M8X 16 PLATED	1	1	1					
74	2	26450-080952	BOLT, M8X 95	4	4	4					

N:Old ⇄(Yes/No) New, Q:Old ⇄(No/Yes) New, R:Old ⇄(Yes/Yes) New, S:Old ⇄(No/No) New, W:Add, Z:Discontinued, F:Interchangeable by set, K:Q'ty Change

Copyright (C) YANMAR CO., LTD. All RightsReserved.

Fig.59. CLUTCH ADAPTER

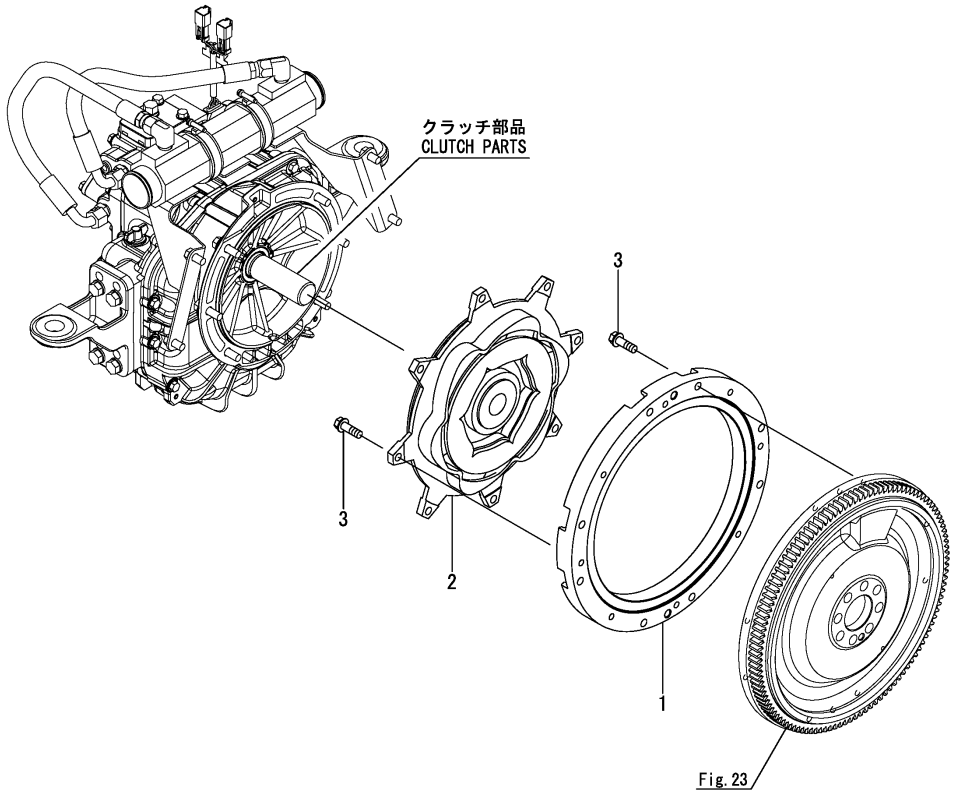

(A)=8LV320 (D)=8LV320Z
(B)=8LV350 (E)=8LV350Z
(C)=8LV370 (F)=8LV370Z

No.	Lev.	Parts No.	Description	Q'ty (A)	(B)	(C)	(D)	(E)	(F)	I	R
1	1	119798-21540	SPACER, CF-R-136	1	1	1					
2	1	119798-85530	DAMPER	1	1	1					
3	1	26136-100302	BOLT, M10X 30 PLATED	16	16	16					

N:Old $\xleftarrow[\text{No}]{\text{Yes}}$ New, Q:Old $\xleftarrow[\text{Yes}]{\text{No}}$ New, R:Old $\xleftarrow[\text{Yes}]{\text{Yes}}$ New, S:Old $\xleftarrow[\text{No}]{\text{No}}$ New, W:Add, Z:Discontinued, F:Interchangeable by set, K:Q'ty Change

Copyright (C) YANMAR CO., LTD. All RightsReserved.

Fig.60. DRIVE ADAPTER

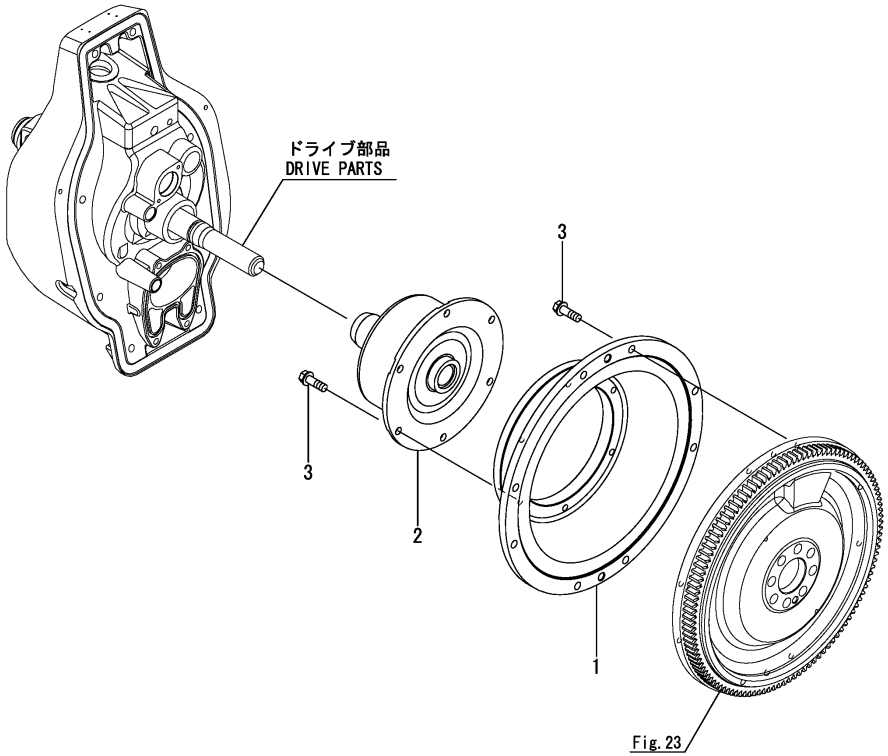

(A)=8LV320 (B)=8LV350 (C)=8LV370 (D)=8LV320Z (E)=8LV350Z (F)=8LV370Z

No.	Lev.	Parts No.	Description	Q'ty (A)	(B)	(C)	(D)	(E)	(F)	I	R
1	1	119799-21520	SPACER, FLYWHEEL				1	1	1		
2	1	196350-23010	COUPLING, LC-6000				1	1	1		
3	1	26136-100302	BOLT, M10X 30 PLATED				14	14	14		

N:Old $\xleftrightarrow[\text{No}]{\text{Yes}}$ New, Q:Old $\xleftrightarrow[\text{Yes}]{\text{No}}$ New, R:Old $\xleftrightarrow[\text{Yes}]{\text{Yes}}$ New, S:Old $\xleftrightarrow[\text{No}]{\text{No}}$ New, W:Add, Z:Discontinued, F:Interchangeable by set, K:Q'ty Change

Copyright (C) YANMAR CO., LTD. All RightsReserved.

Fig.61. STARTING MOTOR

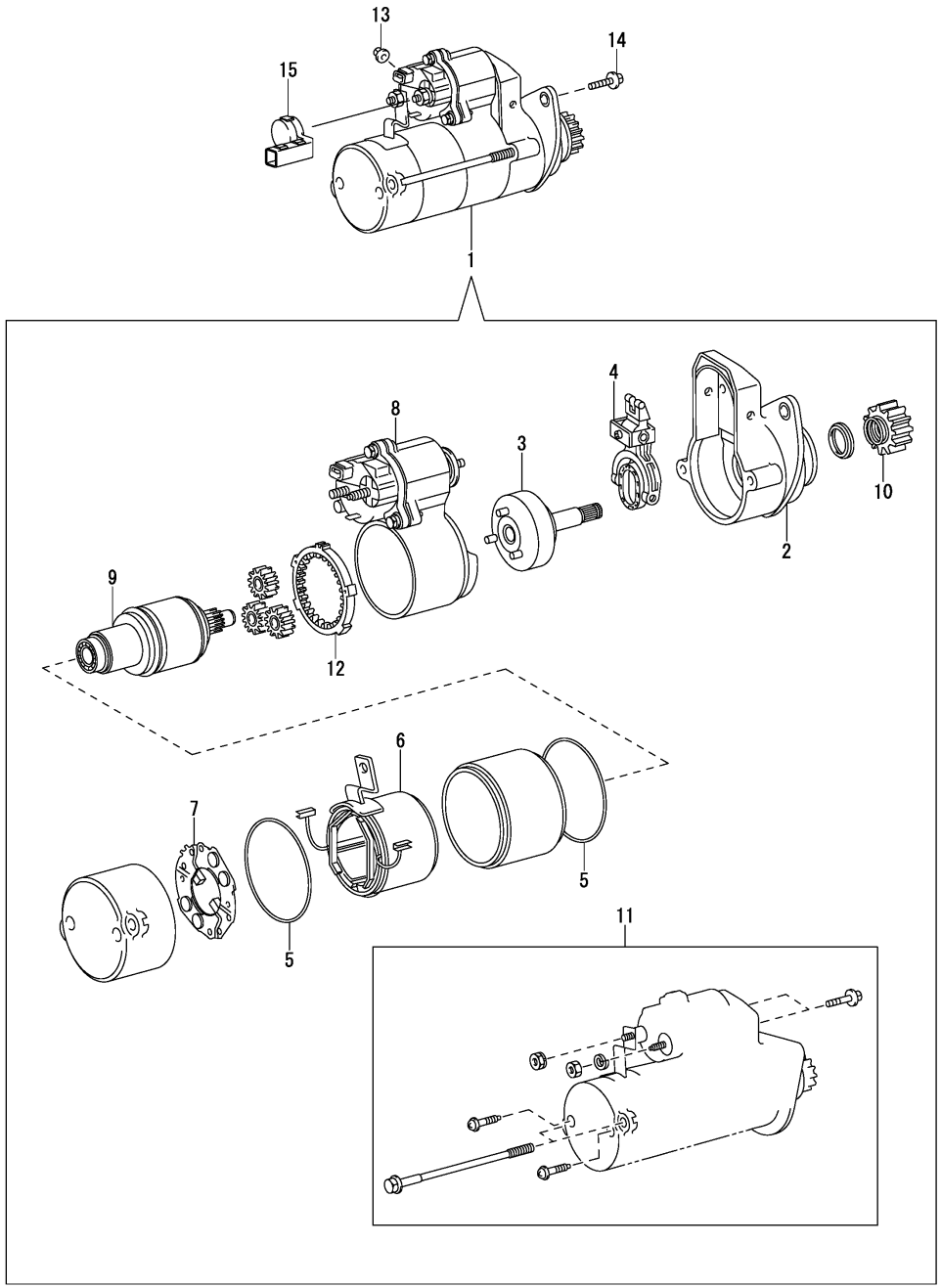

(A)=8LV320 (B)=8LV350 (C)=8LV370 (D)=8LV320Z (E)=8LV350Z (F)=8LV370Z

No.	Lev.	Parts No.	Description	Q'ty (A)	(B)	(C)	(D)	(E)	(F)	I	R
1	1	119798-77010	STARTER ASSY	1	1	1	1	1	1		
2	2	119798-77120	HOUSING	1	1	1	1	1	1		
3	2	119798-77140	CLUTCH ASSY, PINION	1	1	1	1	1	1		
4	2	119798-77150	LEVER	1	1	1	1	1	1		
5	2	119798-77160	RUBBER, STARTER	2	2	2	2	2	2		
6	2	119798-77170	YOKE, STARTER	1	1	1	1	1	1		
7	2	119798-77180	HOLDER, BRUSH	1	1	1	1	1	1		
8	2	119798-77190	SWITCH, MAGNET	1	1	1	1	1	1		
9	2	119798-77390	ARMATURE ASSY	1	1	1	1	1	1		
10	2	119798-77400	PINION	1	1	1	1	1	1		
11	2	119798-77410	STARTER KIT, REPAIR	1	1	1	1	1	1		
12	2	119798-77420	GEAR	1	1	1	1	1	1		
13	1	119798-77020	NUT, M10	1	1	1	1	1	1		
14	1	119798-77030	BOLT, FLANGE M12X40	2	2	2	2	2	2		
15	1	119798-77990	CAP	1	1	1	1	1	1		

N:Old $\xleftrightarrow[\text{No}]{\text{Yes}}$ New, Q:Old $\xleftrightarrow[\text{Yes}]{\text{No}}$ New, R:Old $\xleftrightarrow[\text{Yes}]{\text{Yes}}$ New, S:Old $\xleftrightarrow[\text{No}]{\text{No}}$ New, W:Add, Z:Discontinued, F:Interchangeable by set, K:Q'ty Change

Copyright (C) YANMAR CO., LTD. All RightsReserved.

Fig.62. GENERATOR

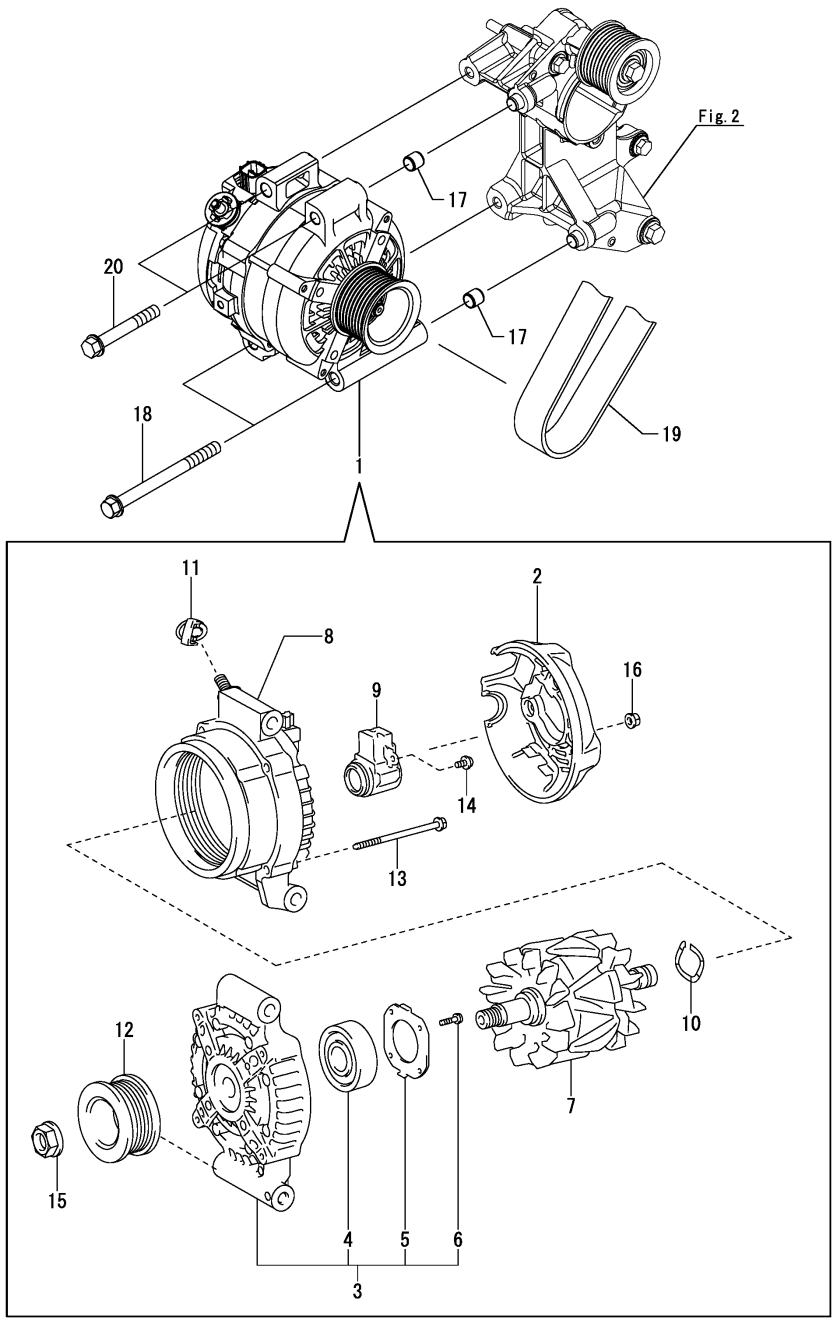

(A)=8LV320 (B)=8LV350 (C)=8LV370 (D)=8LV320Z (E)=8LV350Z (F)=8LV370Z

No.	Lev.	Parts No.	Description	Q'ty (A)	(B)	(C)	(D)	(E)	(F)	I	R
1	1	119798-77200	ALTERNATOR, 12V-180A	1	1	1	1	1	1		
2	2	119798-77230	COVER ASSY, END	1	1	1	1	1	1		
3	2	119798-77240	FRAME, DRIVE END	1	1	1	1	1	1		
4	3	119798-77250	BEARING	1	1	1	1	1	1		
5	3	119798-77260	PLATE	1	1	1	1	1	1		
6	3	119798-77360	SCREW	4	4	4	4	4	4		
7	2	119798-77270	ROTOR	1	1	1	1	1	1		
8	2	119798-77280	COIL	1	1	1	1	1	1		
9	2	119798-77290	HOLDER, BRUSH	1	1	1	1	1	1		
10	2	119798-77300	WASHER	1	1	1	1	1	1		
11	2	119798-77310	INSULATION	1	1	1	1	1	1		
12	2	119798-77320	PULLEY	1	1	1	1	1	1		
13	2	119798-77330	BOLT, THROUGH	4	4	4	4	4	4		
14	2	119798-77340	SCREW	2	2	2	2	2	2		
15	2	119798-77370	NUT, LOCK	1	1	1	1	1	1		
16	2	119798-77380	NUT	3	3	3	3	3	3		
17	1	119798-77210	PIN, D13XL12	2	2	2	2	2	2		
18	1	119798-77220	BOLT, FLANGE M10X120	2	2	2	2	2	2		
19	1	119798-77350	BELT, V-RIBBED	1	1	1	1	1	1		
20	1	26136-100702	BOLT, 10 X 70	2	2	2	2	2	2		

N:Old ◄Yes/No► New, Q:Old ◄No/Yes► New, R:Old ◄Yes/Yes► New, S:Old ◄No/No► New, W:Add, Z:Discontinued, F:Interchangeable by set, K:Q'ty Change

Copyright (C) YANMAR CO., LTD. All RightsReserved.

Fig.63. BELT COVER

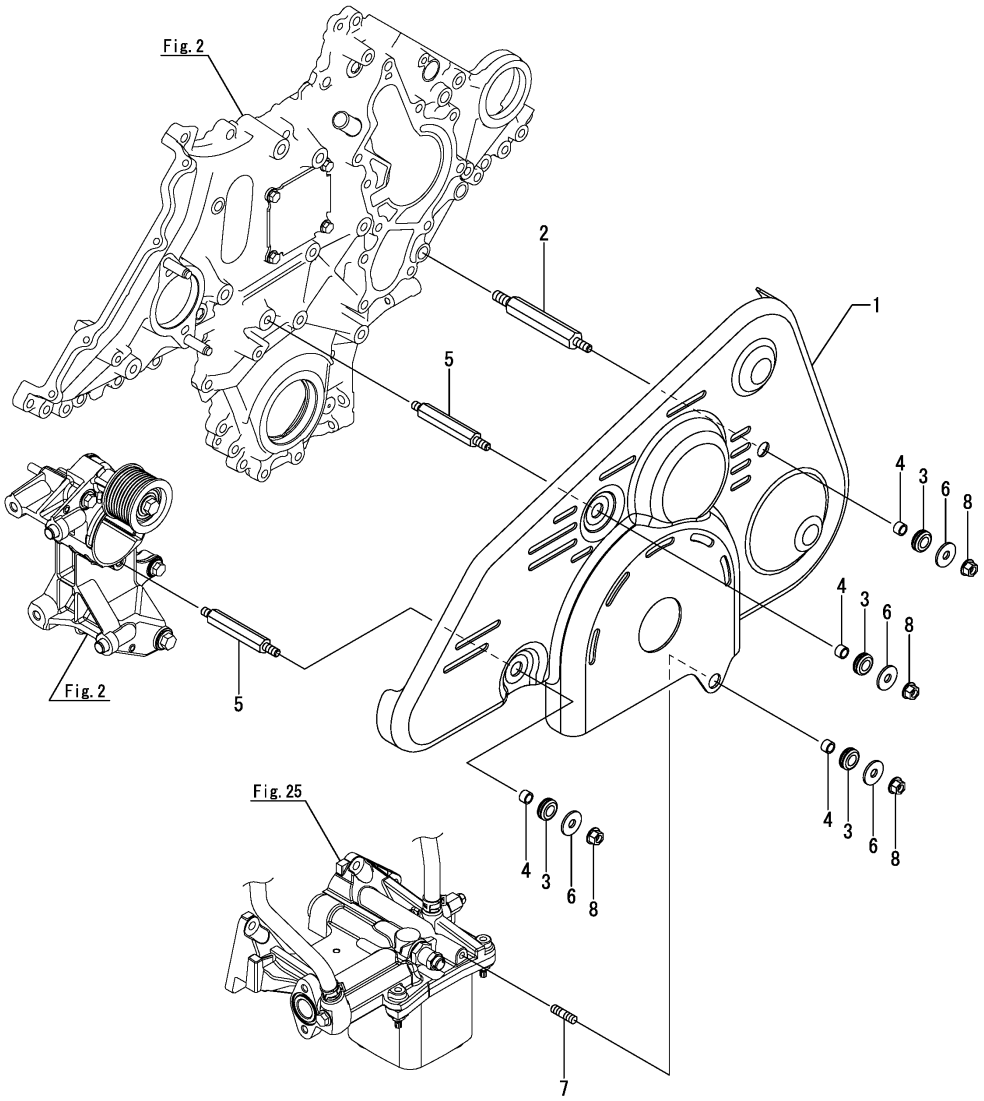

(A)=8LV320 (B)=8LV350 (C)=8LV370 (D)=8LV320Z (E)=8LV350Z (F)=8LV370Z

No.	Lev.	Parts No.	Description	Q'ty (A)	(B)	(C)	(D)	(E)	(F)	I	R
1	1	119798-09400	COVER, BELT	1	1	1	1	1	1		
2	1	119798-09410	BOLT	1	1	1	1	1	1		
3	1	105100-55501	ABSORBER	4	4	4	4	4	4		
4	1	105100-55540	COLLAR	4	4	4	4	4	4		
5	1	119578-77450	BOLT	2	2	2	2	2	2		
6	1	22157-080000	WASHER, 8	4	4	4	4	4	4		
7	1	26216-080202	STUD, M8X 20	1	1	1	1	1	1		
8	1	26366-080002	NUT, M8	4	4	4	4	4	4		

N:Old $\frac{\text{Yes}}{\text{No}}$ New, Q:Old $\frac{\text{No}}{\text{Yes}}$ New, R:Old $\frac{\text{Yes}}{\text{Yes}}$ New, S:Old $\frac{\text{No}}{\text{No}}$ New, W:Add, Z:Discontinued, F:Interchangeable by set, K:Q'ty Change

Copyright (C) YANMAR CO., LTD. All RightsReserved.

Fig.64. ENGINE CONTROL UNIT

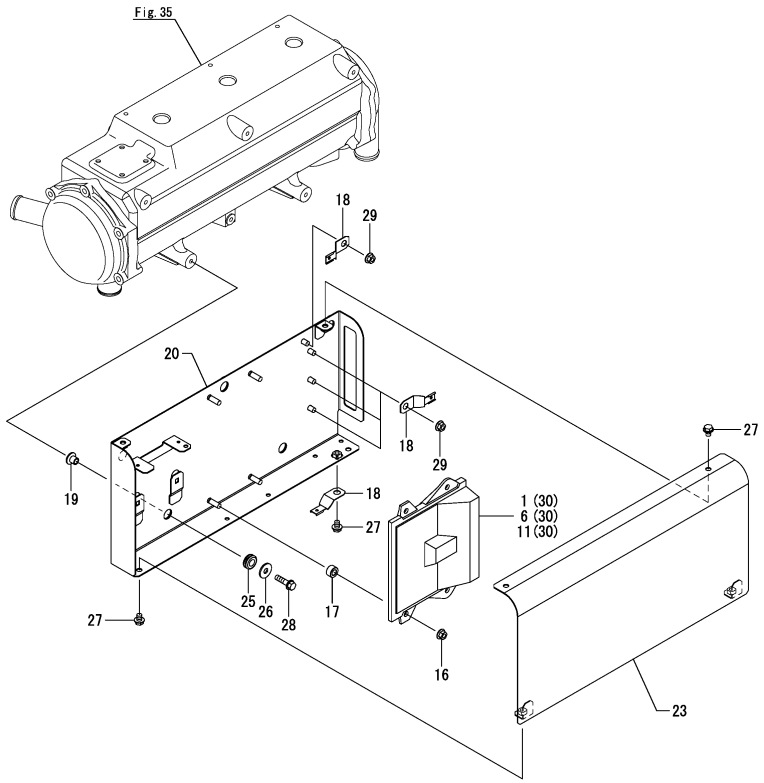

(A)=8LV320 (B)=8LV350 (C)=8LV370 (D)=8LV320Z (E)=8LV350Z (F)=8LV370Z

No.	Lev.	Parts No.	Description	Q'ty (A)	(B)	(C)	(D)	(E)	(F)	I	R
1	1	119798-75100	CONTROLLER ASSY			1			1		1
6	1	119798-75200	CONTROLLER ASSY		1			1			1
11	1	119798-75300	CONTROLLER ASSY	1			1				1
16	1	26366-080002	NUT, M8	4	4	4	4	4	4		
17	1	119266-55620	SPACER	4	4	4	4	4	4		
18	1	119578-75610	CLIP, CONNECTOR	5	5	5	5	5	5		
19	1	119578-77680	COLLAR	5	5	5	5	5	5		
20	1	119798-77800	BOX, ECU	1	1	1	1	1	1		
23	1	119798-77880	COVER, ECU-BOX	1	1	1	1	1	1		
25	1	119578-91351	ABSORBER	5	5	5	5	5	5		
26	1	22157-080000	WASHER, 8	5	5	5	5	5	5		
27	1	26106-080102	BOLT, M8X 10 PLATED	5	5	5	5	5	5		
28	1	26106-080302	BOLT, M8X 30 PLATED	5	5	5	5	5	5		
29	1	26366-080002	NUT, M8	4	4	4	4	4	4		
30	1	1R1808-00900	ECU HARD	1	1	1	1	1	1		2

Remarks
(1) Eco ECU
This part cannot be ordered.
Replace the part using a Service ECU with the proper engine information installed.
(2) Service ECU
If the proper information is not installed, the engine will not operate.
To install proper information, go to an authorized Distributor.

N:Old $\frac{\text{Yes}}{\text{No}}$ New, Q:Old $\frac{\text{No}}{\text{Yes}}$ New, R:Old $\frac{\text{Yes}}{\text{Yes}}$ New, S:Old $\frac{\text{No}}{\text{No}}$ New, W:Add, Z:Discontinued, F:Interchangeable by set, K:Q'ty Change

Copyright (C) YANMAR CO., LTD. All RightsReserved.

Fig.65. ELECTRONIC DRIVE UNIT

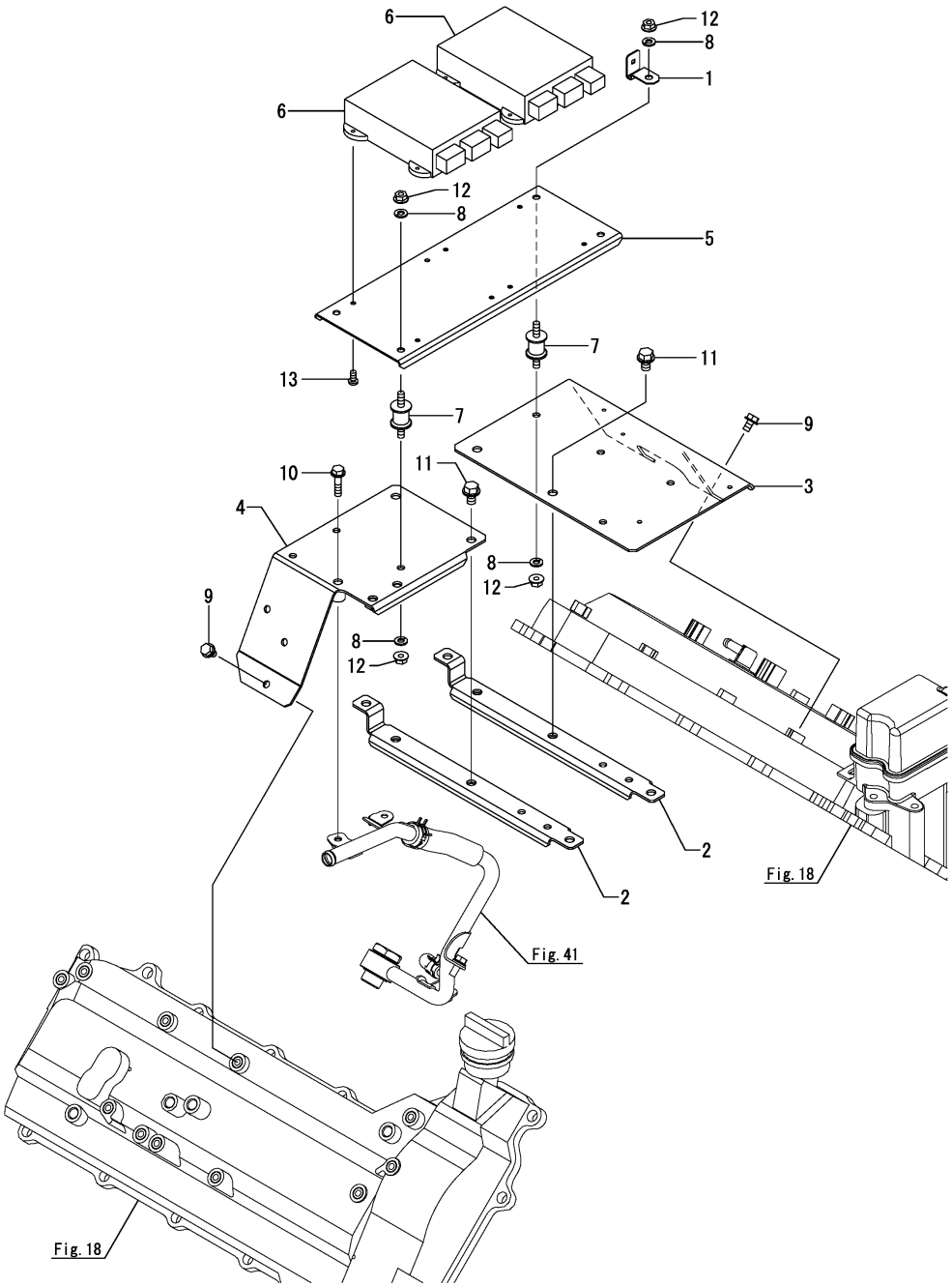

(A)=8LV320 (B)=8LV350 (C)=8LV370 (D)=8LV320Z (E)=8LV350Z (F)=8LV370Z

No.	Lev.	Parts No.	Description	Q'ty (A)	(B)	(C)	(D)	(E)	(F)	I	R
1	1	119798-77650	BRACKET	1	1	1	1	1	1		
2	1	119798-77710	BRACKET, ECU	2	2	2	2	2	2		
3	1	119798-77720	BRACKET, ECU	1	1	1	1	1	1		
4	1	119798-77731	BRACKET, ECU	1	1	1	1	1	1		
5	1	119798-77740	BRACKET, ECU	1	1	1	1	1	1		
6	1	119798-77900	EDU, INJECTOR	2	2	2	2	2	2		
7	1	119175-91050	ABSORBER	4	4	4	4	4	4		
8	1	22217-060000	WASHER, SPRING 6	8	8	8	8	8	8		
9	1	26106-060102	BOLT, M6X 10 PLATED	3	3	3	3	3	3		
10	1	26106-060252	BOLT, M6X 25 PLATED	1	1	1	1	1	1		
11	1	26106-080122	BOLT, M8X 12 PLATED	4	4	4	4	4	4		
12	1	26366-060002	NUT, M6	8	8	8	8	8	8		
13	1	26557-040082	SCREW, M4X 8	8	8	8	8	8	8		

N:Old $\overset{\text{Yes}}{\underset{\text{No}}{\leftrightarrows}}$ New, Q:Old $\overset{\text{No}}{\underset{\text{Yes}}{\leftrightarrows}}$ New, R:Old $\overset{\text{Yes}}{\underset{\text{Yes}}{\leftrightarrows}}$ New, S:Old $\overset{\text{No}}{\underset{\text{No}}{\leftrightarrows}}$ New, W:Add, Z:Discontinued, F:Interchangeable by set, K:Q'ty Change

Copyright (C) YANMAR CO., LTD. All RightsReserved.

Fig.66. WIRE HARNESS

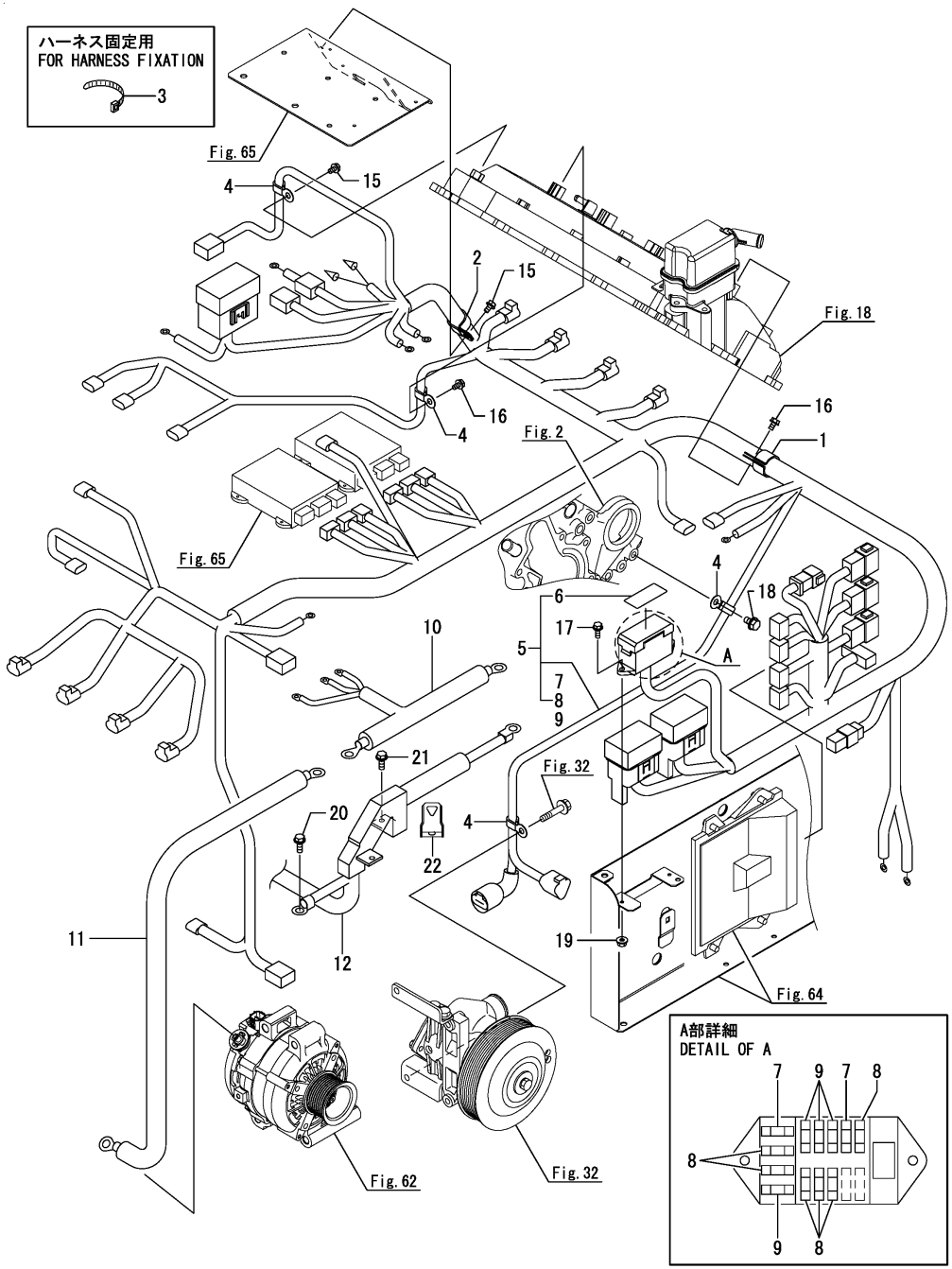

(A)=8LV320 (B)=8LV350 (C)=8LV370 (D)=8LV320Z (E)=8LV350Z (F)=8LV370Z

No.	Lev.	Parts No.	Description	Q'ty (A)	(B)	(C)	(D)	(E)	(F)	I	R
1	1	119578-39200	RETAINER	1	1	1	1	1	1		
2	1	121575-49310	RETAINER, PIPE	1	1	1	1	1	1		
3	1	194250-51660	BAND, NYLON	4	4	4	4	4	4		
4	1	105430-67110	CLAMP, CORD	4	4	4	4	4	4		
5	1	119798-77061	HARNESS, WIRE	1	1	1	1	1	1		
6	2	119798-07810	LABEL, FUSE LOCATION	1	1	1	1	1	1		
7	2	127677-77110	FUSE, 32V-7.5A	2	2	2	2	2	2		
8	2	127677-77120	FUSE, 32V-10A	6	6	6	6	6	6		
9	2	127677-77130	FUSE, 32V-20A	4	4	4	4	4	4		
10	1	119798-77071	HARNESS, WIRE	1	1	1	1	1	1		
11	1	119798-77081	HARNESS, WIRE	1	1	1	1	1	1		
12	1	119798-77090	HARNESS, WIRE	1	1	1	1	1	1		
15	1	26106-060102	BOLT, M6X 10 PLATED	2	2	2	2	2	2		
16	1	26106-060122	BOLT, M6X 12 PLATED	2	2	2	2	2	2		
17	1	26106-060162	BOLT, M6X 16 PLATED	2	2	2	2	2	2		
18	1	26106-080102	BOLT, M8X 10 PLATED	1	1	1	1	1	1		
19	1	26366-060002	NUT, M6	2	2	2	2	2	2		
20	1	119798-14160	BOLT, M8X20	1	1	1	1	1	1		
21	1	119798-49860	BOLT, M6X14	3	3	3	3	3	3		
22	1	119798-77050	BRACKET	1	1	1	1	1	1		

N:Old ◄Yes/No► New, Q:Old ◄No/Yes► New, R:Old ◄Yes/Yes► New, S:Old ◄No/No► New, W:Add, Z:Discontinued, F:Interchangeable by set, K:Q'ty Change

Copyright (C) YANMAR CO., LTD. All RightsReserved.

Fig.67. SENSOR

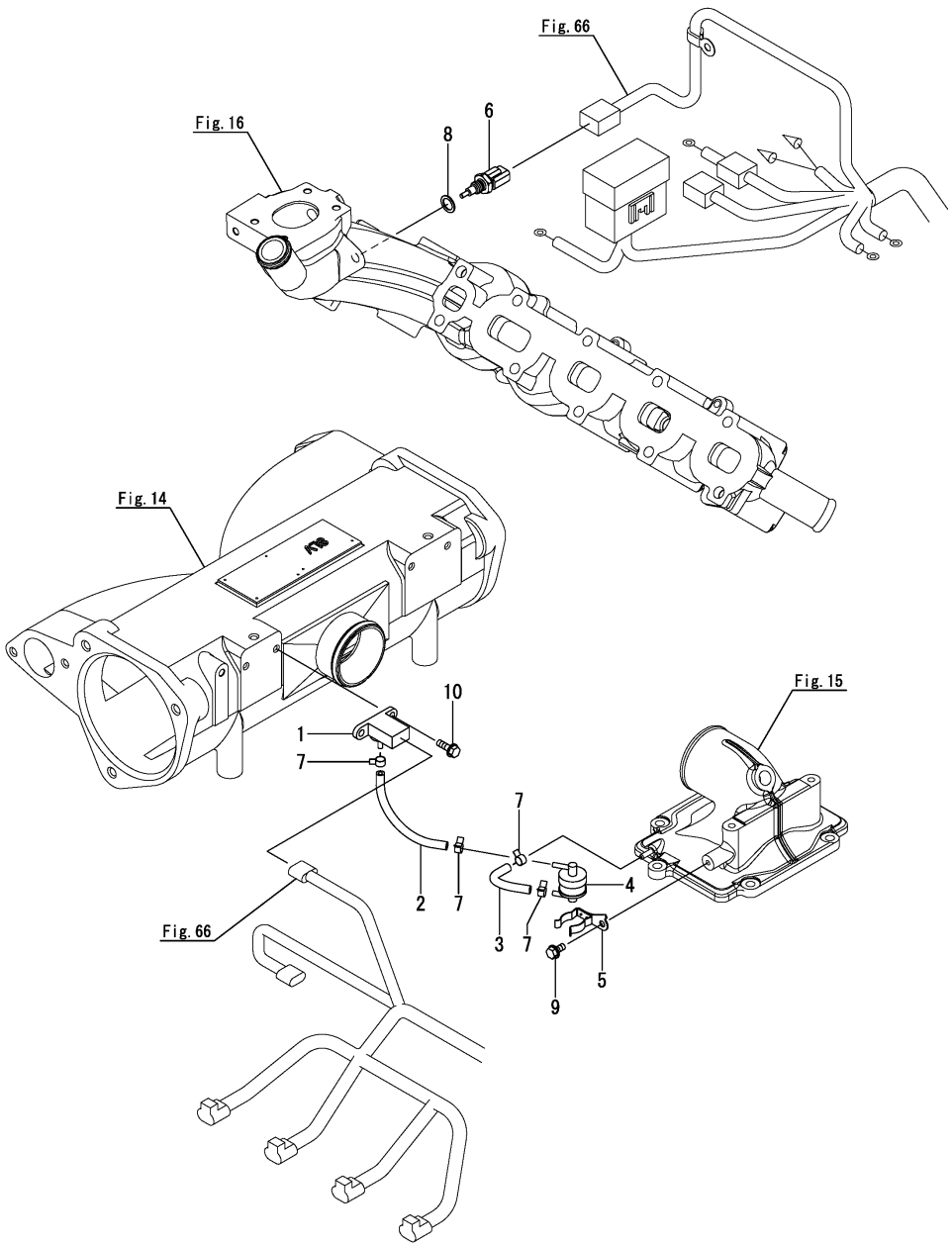

(A)=8LV320 (B)=8LV350 (C)=8LV370 (D)=8LV320Z (E)=8LV350Z (F)=8LV370Z

No.	Lev.	Parts No.	Description	Q'ty (A)	(B)	(C)	(D)	(E)	(F)	I	R
1	1	119798-91120	SENSOR	1	1	1	1	1	1		
2	1	119798-91130	HOSE, AIR PRESSURE	1	1	1	1	1	1		
3	1	119798-91140	HOSE, AIR PRESSURE	1	1	1	1	1	1		
4	1	119798-91500	FILTER, GAS	1	1	1	1	1	1		
5	1	119798-91510	CLAMP	1	1	1	1	1	1		
6	1	119798-91700	SENSOR	1	1	1	1	1	1		
7	1	23080-008000	CLAMP, 8	4	4	4	4	4	4		
8	1	23414-120000	GASKET, 12X1.0	1	1	1	1	1	1		
9	1	26106-060122	BOLT, M6X 12 PLATED	1	1	1	1	1	1		
10	1	26106-060182	BOLT, M6X 18 PLATED	2	2	2	2	2	2		

N:Old $\frac{\text{Yes}}{\text{No}}$ New, Q:Old $\frac{\text{No}}{\text{Yes}}$ New, R:Old $\frac{\text{Yes}}{\text{Yes}}$ New, S:Old $\frac{\text{No}}{\text{No}}$ New, W:Add, Z:Discontinued, F:Interchangeable by set, K:Q'ty Change

Copyright (C) YANMAR CO., LTD. All RightsReserved.

Fig.68. RELAY & FUSE

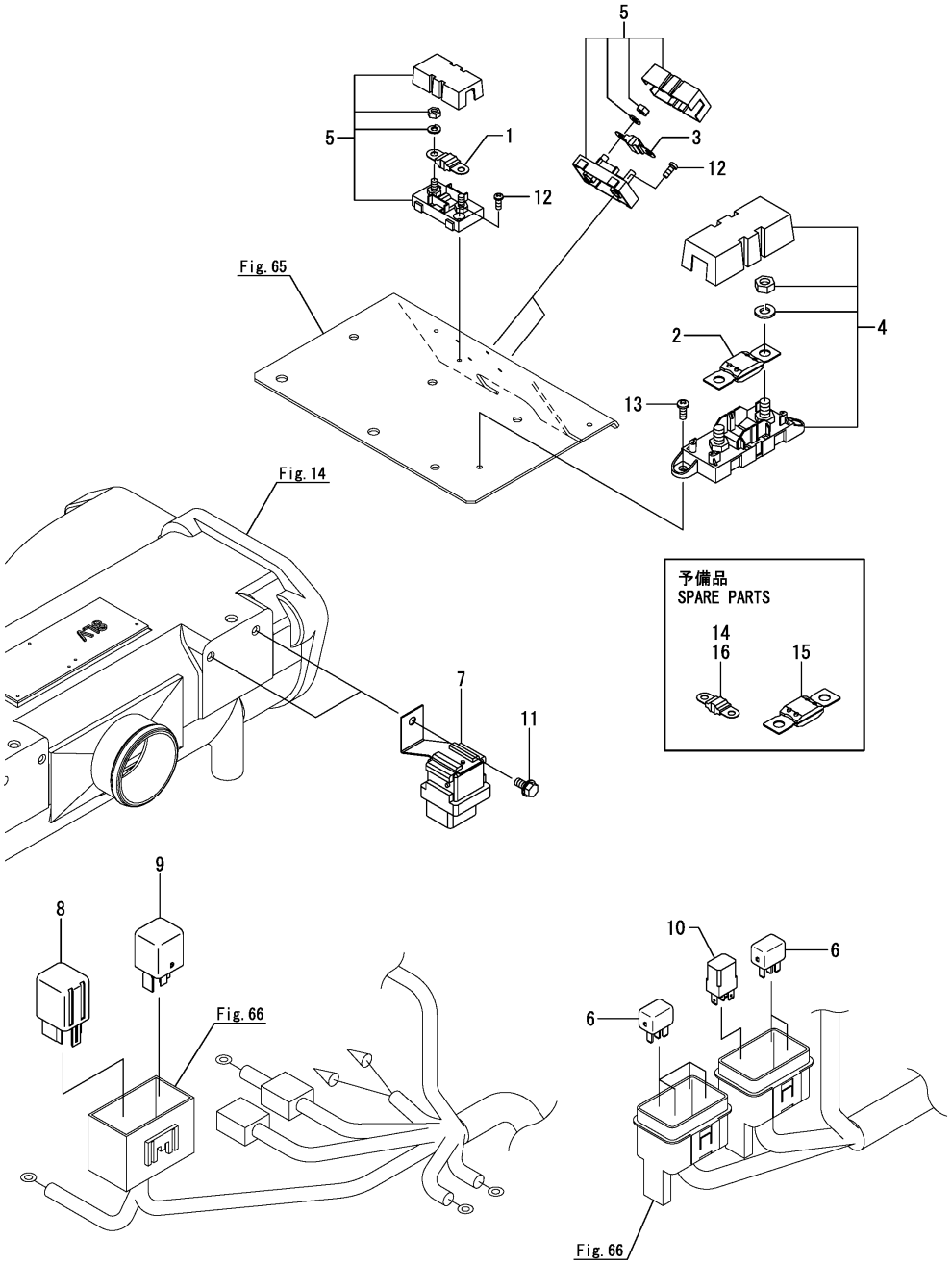

(A)=8LV320 (D)=8LV320Z
(B)=8LV350 (E)=8LV350Z
(C)=8LV370 (F)=8LV370Z

No.	Lev.	Parts No.	Description	Q'ty (A)	(B)	(C)	(D)	(E)	(F)	I	R
1	1	119578-77080	FUSE, 32V-50A	1	1	1	1	1	1		
2	1	119798-77100	FUSE, 32V-300A	1	1	1	1	1	1		
3	1	119798-77110	FUSE, 32V-80A	2	2	2	2	2	2		
4	1	119578-77160	HOLDER, FUSE	1	1	1	1	1	1		
5	1	119578-77200	HOLDER, FUSE	3	3	3	3	3	3		
6	1	127677-77330	RELAY, MAIN	6	6	6	6	6	6		
7	1	119798-77530	RERAY	2	2	2	2	2	2		
8	1	119798-77540	RELAY, STARTER	1	1	1	1	1	1		
9	1	119798-77550	RELAY	1	1	1	1	1	1		
10	1	1K1140-82500	RELAY(ACM13211M01	1	1	1	1	1	1		
11	1	26106-060122	BOLT, M6X 12 PLATED	2	2	2	2	2	2		
12	1	26557-040102	SCREW, M4X10	6	6	6	6	6	6		
13	1	26557-050102	SCREW, M5X10	2	2	2	2	2	2		
14	1	119578-77080	FUSE, 32V-50A	1	1	1	1	1	1		
15	1	119798-77100	FUSE, 32V-300A	1	1	1	1	1	1		
16	1	119798-77110	FUSE, 32V-80A	1	1	1	1	1	1		

N:Old $\xleftarrow[\text{No}]{\text{Yes}}$ New, Q:Old $\xleftarrow[\text{Yes}]{\text{No}}$ New, R:Old $\xleftarrow[\text{Yes}]{\text{Yes}}$ New, S:Old $\xleftarrow[\text{No}]{\text{No}}$ New, W:Add, Z:Discontinued, F:Interchangeable by set, K:Q'ty Change

Copyright (C) YANMAR CO., LTD. All RightsReserved.

Fig.69. BATTERY TERMINAL

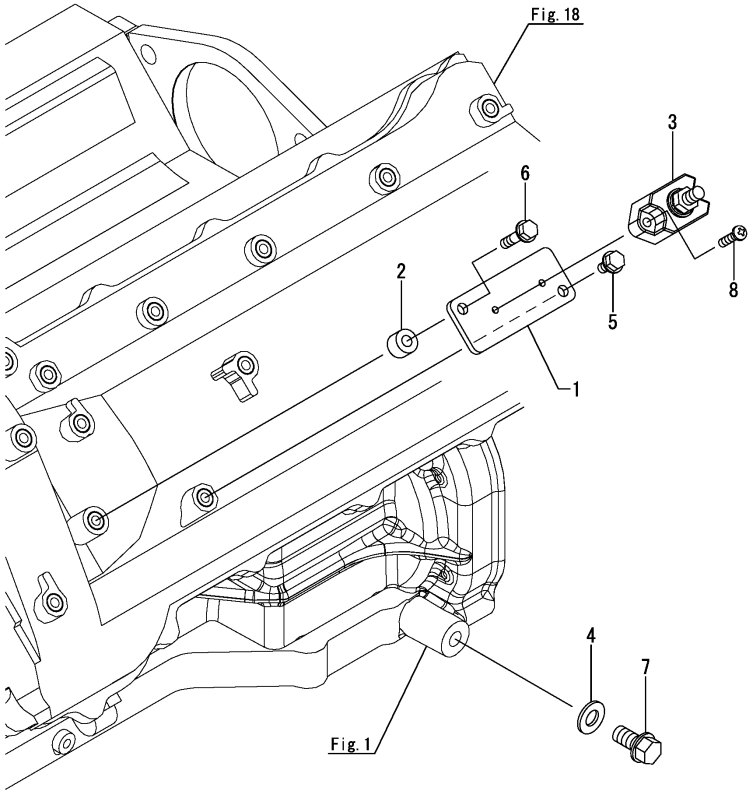

(A)=8LV320 (B)=8LV350 (C)=8LV370 (D)=8LV320Z (E)=8LV350Z (F)=8LV370Z

No.	Lev.	Parts No.	Description	Q'ty (A)	(B)	(C)	(D)	(E)	(F)	I	R
1	1	119798-77760	BRACKET	1	1	1	1	1	1		
2	1	119798-77870	SPACER	1	1	1	1	1	1		
3	1	1E8230-84490	BLOCK, TERMINAL	1	1	1	1	1	1		
4	1	22133-100000	WASHER, 10	1	1	1	1	1	1		
5	1	26106-060122	BOLT, M6X 12 PLATED	1	1	1	1	1	1		
6	1	26106-060252	BOLT, M6X 25 PLATED	1	1	1	1	1	1		
7	1	26136-100202	BOLT, M10X 20 PLATED	1	1	1	1	1	1		
8	1	26557-050202	SCREW, M5X20	2	2	2	2	2	2		

N:Old $\xleftrightarrow[\text{No}]{\text{Yes}}$ New, Q:Old $\xleftrightarrow[\text{Yes}]{\text{No}}$ New, R:Old $\xleftrightarrow[\text{Yes}]{\text{Yes}}$ New, S:Old $\xleftrightarrow[\text{No}]{\text{No}}$ New, W:Add, Z:Discontinued, F:Interchangeable by set, K:Q'ty Change

Copyright (C) YANMAR CO., LTD. All RightsReserved.

Fig.70. TOOL

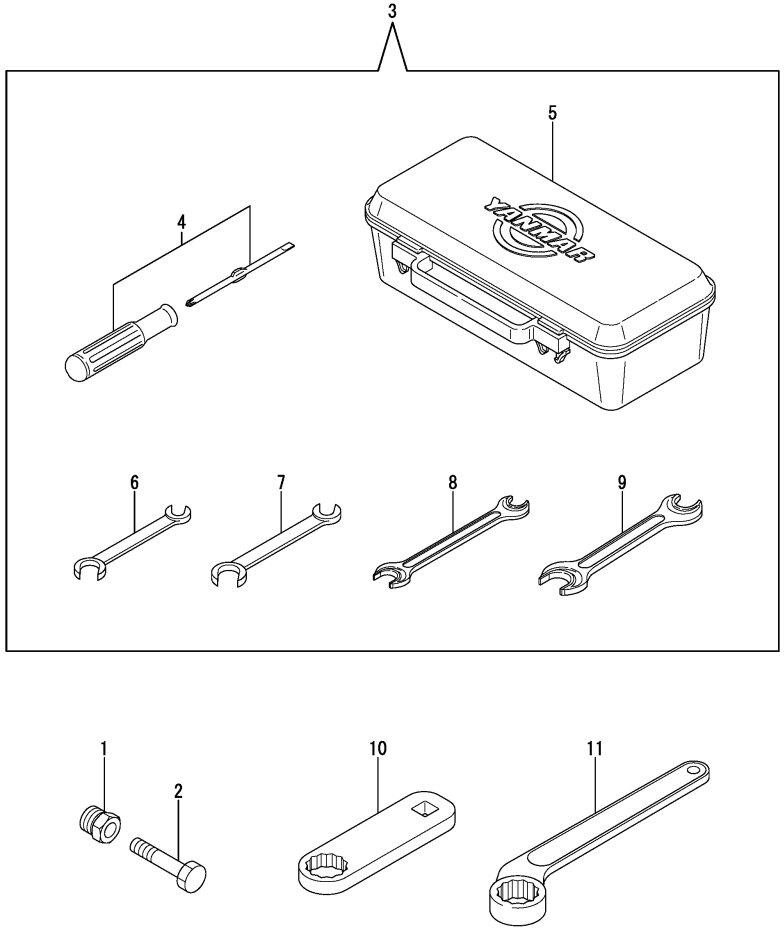

(A)=8LV320 (B)=8LV350 (C)=8LV370 (D)=8LV320Z (E)=8LV350Z (F)=8LV370Z

No.	Lev.	Parts No.	Description	Q'ty (A)	(B)	(C)	(D)	(E)	(F)	I	R
1	1	120325-92110	TOOL, IMPELLER	1	1	1	1	1	1		
2	1	26116-100504	BOLT, M10X 50 PLATED	1	1	1	1	1	1		
3	1	719195-92500	TOOL ASSY	1	1	1	1	1	1		1
4	2	104200-92350	DRIVER, SCREW	1	1	1	1	1	1		1
5	2	104200-92600	BOX, TOOL	1	1	1	1	1	1		1
6	2	28110-080100	SPANNER, 8X10	1	1	1	1	1	1		1
7	2	28110-100130	SPANNER, 10X13	1	1	1	1	1	1		1
8	2	28110-120140	SPANNER, 12X14	1	1	1	1	1	1		1
9	2	28110-170190	SPANNER, 17X19	1	1	1	1	1	1		1
10	1	119798-92100	WRENCH	1	1	1	1	1	1		1
11	1	119798-92120	WRENCH	1	1	1	1	1	1		1

Remarks
(1)Optional parts.

N:Old $\overset{\text{Yes}}{\underset{\text{No}}{\leftrightarrow}}$ New, Q:Old $\overset{\text{No}}{\underset{\text{Yes}}{\leftrightarrow}}$ New, R:Old $\overset{\text{Yes}}{\underset{\text{Yes}}{\leftrightarrow}}$ New, S:Old $\overset{\text{No}}{\underset{\text{No}}{\leftrightarrow}}$ New, W:Add, Z:Discontinued, F:Interchangeable by set, K:Q'ty Change

Copyright (C) YANMAR CO., LTD. All RightsReserved.

Parts No. Index

Parts No.	Fig. No.	Ref. No.
102210-07990	7	19
104200-92350	70	4
104200-92600	70	5
105100-55501	63	3
105100-55540	63	4
105430-67110	66	4
119171-42530	32	11
119171-49300	40	21
119172-48010	13	21
119172-48130	40	1
	46	16
119172-48190	42	1
	46	1
	49	1
	53	15
	71	8
119172-48250	42	2
		7
	53	16
	71	9
119172-48350	39	4
	40	2
119172-48410	40	3
119172-48480	12	37
	13	37
	36	1
		10
		17
		20
		23
	37	1
		10
	38	2
	39	1
		5
	40	4
119172-48540	36	2
		24
	37	2
		11
	38	3
119173-18880	11	4
		6
119173-49160	40	11
119175-13800	13	19
119175-49550	39	7
119175-91050	65	7
119254-44910	58	66
119266-55620	64	17
119574-07400	7	10

Parts No.	Fig. No.	Ref. No.
119574-18790	14	8
119574-18910	11	2
119578-07750	7	1
119578-07890	7	12
119578-39200	66	1
119578-75610	64	18
119578-77080	68	1
		14
119578-77160	68	4
119578-77200	68	5
119578-77450	63	5
119578-77680	64	19
119578-91300	58	67
119578-91351	64	25
119593-39080	28	3
119593-39450	27	6
119593-42202	32	2
119593-49080	37	12
119620-49290	14	11
	16	13
119770-90020	17	13
	18	17
		24
119770-90180	2	5
119770-90440	23	22
119770-90540	22	38
119770-90680	2	6
119770-90690	6	13
	25	6
119770-90720	1	18
	6	14
119770-90790	1	19
119770-90880	50	4
119770-90900	44	11
119770-90970	25	7
119770-90980	25	8
119771-00151	23	19
119771-90030	1	9
119771-90050	1	10
		11
119771-90310	45	12
119773-13160	16	2
		5
119773-13250	12	11
		17
		29
	13	11
		30
119773-13300	12	12
		18

Parts No.	Fig. No.	Ref. No.
119773-13300	12	30
	13	12
		31
119773-13501	12	13
		19
		34
	13	16
		35
119773-49550	34	5
119775-08230	5	1
119775-48640	12	14
		24
		38
	13	38
	39	2
119775-49120	36	5
	37	5
	40	8
119778-08200	4	4
119778-08350	4	5
119778-26401	53	7
119778-26411	53	8
119779-48620	39	6
119779-49210	38	4
119779-49230	37	13
	38	5
119779-49550	39	8
119779-49910	38	9
119798-01010	1	1
119798-01020	1	2
119798-01030	1	3
119798-01040	1	4
119798-01050	1	5
	23	30
119798-01060	1	6
		7
119798-01070	1	12
119798-01080	1	8
	22	10
119798-01090	1	13
119798-01100	1	14
119798-01110	1	15
119798-01120	1	16
119798-01130	2	1
119798-01160	2	7
119798-01170	2	13
119798-01180	2	8
119798-01190	2	9
119798-01200	2	14
119798-01210	2	10

Parts No.	Fig. No.	Ref. No.
119798-01220	2	11
119798-01230	2	15
119798-01240	2	16
119798-01250	2	17
119798-01260	2	18
119798-01270	2	20
119798-01280	2	21
119798-01290	2	22
119798-01300	18	1
119798-01310	18	2
119798-01320	18	3
119798-01330	18	4
119798-01340	18	5
119798-01350	18	6
119798-01360	18	7
119798-01370	18	8
119798-01380	18	9
119798-01390	18	10
119798-01400	1	17
119798-01410	6	1
119798-01420	6	2
119798-01580	3	1
119798-01590	3	2
119798-01600	4	1
119798-01700	2	23
	33	1
		2
	45	1
119798-01710	2	12
119798-01720	2	24
119798-01730	2	25
	6	15
119798-01740	2	26
119798-01750	2	27
119798-01760	2	28
119798-01770	2	29
	33	3
119798-01780	2	30
119798-01790	2	31
119798-01800	2	32
	6	27
	17	1
	33	4
	44	1
119798-01810	2	2
		19
		33
119798-01820	2	3
119798-01830	2	4
119798-01840	2	34

Parts No. Index

Parts No.	Fig. No.	Ref. No.
119798-01850	2	35
119798-01980	3	6
119798-01990	3	7
119798-02110	23	1
119798-02120	23	2
119798-02130	23	3
119798-02150	23	5
119798-02160	23	6
119798-02170	23	7
119798-02180	23	8
119798-02190	23	9
119798-02200	23	10
119798-02210	23	11
119798-02220	23	12
119798-02230	23	13
119798-02240	23	14
119798-02250	23	15
119798-02260	23	16
119798-02270	23	17
119798-02280	23	18
119798-03010	9	1
119798-03020	9	2
119798-03030	9	3
119798-03161	8	1
119798-07150	7	4
119798-07650	20	1
119798-07750	20	2
119798-07790	20	3
119798-07800	7	11
119798-07810	66	6
119798-08220	5	4
119798-08310	5	6
119798-08320	5	7
119798-08530	5	2
119798-08620	5	3
119798-09320	21	1
119798-09330	21	2
119798-09340	21	3
119798-09400	63	1
119798-09410	63	2
119798-11010	18	11
119798-11020	18	18
119798-11030	18	25
119798-11040	18	26
119798-11050	18	12
		19
119798-11060	18	13
		14
		20
		21

Parts No.	Fig. No.	Ref. No.
119798-11070	18	27
		28
		29
		30
119798-11080	18	15
		22
	22	11
119798-11090	18	16
		23
119798-11100	22	1
119798-11110	22	2
119798-11120	22	3
119798-11130	22	4
119798-11140	22	5
119798-11150	22	6
119798-11160	22	7
119798-11170	22	8
119798-11180	19	1
119798-11190	19	2
119798-11200	22	9
119798-11210	18	31
119798-11220	18	34
119798-11230	18	38
119798-11240	18	32
119798-11250	18	35
119798-11260	18	33
		36
119798-11270	18	39
119798-11280	18	40
119798-11290	18	37
119798-11300	18	41
119798-11310	2	36
	6	3
		16
	9	4
119798-12010	17	2
119798-12020	17	3
119798-12030	17	4
119798-12040	17	5
119798-12050	17	6
119798-12060	17	7
119798-12070	17	8
119798-13010	16	1
119798-13050	16	4
119798-13200	12	1
	13	1
119798-13220	16	7
119798-13230	16	8
119798-13450	12	2
	13	2

Parts No.	Fig. No.	Ref. No.
119798-13510	12	3
	13	3
119798-13530	12	5
	13	5
119798-13550	12	20
119798-13570	12	22
119798-13581	12	6
	13	6
119798-13640	16	9
119798-13650	16	10
119798-13750	12	7
	13	7
119798-13760	12	23
119798-13810	16	11
119798-13820	16	12
119798-14010	22	12
119798-14020	22	13
119798-14030	22	15
119798-14040	22	16
119798-14050	22	18
119798-14060	22	19
119798-14070	22	20
119798-14080	22	21
119798-14090	22	22
119798-14100	22	23
119798-14110	22	24
119798-14120	22	25
119798-14130	22	26
119798-14140	22	14
		17
119798-14150	17	9
		10
	19	3
	22	27
		28
	25	1
	41	1
119798-14160	6	28
	22	29
	66	20
119798-14170	2	37
	6	29
	22	30
	33	5
		6
119798-14180	22	31
119798-14190	22	32
119798-18010	10	1
119798-18020	10	12
119798-18030	10	2

Parts No.	Fig. No.	Ref. No.
119798-18030	10	13
119798-18040	10	3
		14
119798-18050	10	4
		15
119798-18060	10	5
		16
119798-18070	10	6
		17
119798-18080	10	7
119798-18090	10	8
		18
119798-18100	10	9
		19
119798-18110	10	10
		20
119798-18120	10	11
119798-18130	10	21
119798-18140	10	22
119798-18340	10	23
119798-18400	14	2
119798-18420	14	3
119798-18430	14	4
119798-18440	14	5
119798-18450	14	6
119798-18460	14	1
119798-18470	14	7
119798-18500	15	8
119798-18550	14	9
119798-18560	14	10
119798-18621	15	1
119798-18630	15	2
119798-18640	15	3
119798-18700	10	24
119798-18710	11	1
		7
		9
119798-18780	15	4
119798-18911	11	3
119798-18920	11	5
119798-21010	23	20
119798-21020	23	21
119798-21030	23	23
119798-21040	23	24
119798-21050	23	25
119798-21060	23	26
119798-21080	23	27
119798-21090	2	38
	23	28
119798-21100	23	29

Parts No. Index

Parts No.	Fig. No.	Ref. No.
119798-21210	23	31
119798-21220	23	32
119798-21230	23	33
119798-21540	59	1
119798-22010	23	35 -1
119798-22020	23	39 -1
119798-22030	23	37
		41
119798-22100	23	42 -1
119798-23100	23	44
119798-23110	23	46
119798-23120	23	47
119798-23130	23	48
119798-23140	23	49
119798-23150	23	50
119798-23200	23	45
119798-26800	71	7
119798-32010	6	17
119798-32020	6	18
119798-32030	6	19
119798-32040	6	7
119798-32050	6	21
119798-32060	6	8
119798-32070	6	22
119798-32080	6	9
119798-32090	6	23
119798-32100	6	10
119798-32110	6	20
119798-32120	6	6
119798-32130	6	11
119798-32140	6	24
119798-32150	6	4
119798-32160	6	5
119798-32170	6	25
119798-33010	25	2
119798-33020	6	12
	25	3
119798-33030	25	9
119798-33040	25	4
119798-33050	25	5
119798-33060	6	30
	17	11
	24	1
	25	10
119798-33070	25	11
119798-33080	24	2
119798-33090	24	3
119798-33100	24	4
119798-33110	24	5
119798-33120	24	6

Parts No.	Fig. No.	Ref. No.
119798-33130	24	7
119798-33140	24	8
119798-34100	26	1
		10
119798-34450	26	19
119798-34800	26	6
		15
119798-35110	27	1
119798-35300	27	4
119798-35310	27	5
119798-39060	28	1
119798-39070	28	2
119798-39120	29	1
119798-39130	29	2
119798-39160	29	3
119798-39200	29	4
119798-39220	29	5
119798-39300	29	6
119798-39320	29	8
119798-39330	29	10
119798-39340	29	7
		12
119798-39350	29	11
119798-39410	22	33
119798-39420	22	34
119798-39430	22	35
119798-39440	22	36
119798-39450	22	37
119798-42010	33	7
119798-42020	33	8
119798-42030	33	9
119798-42040	33	10
119798-42050	33	11
119798-42060	33	12
119798-42070	33	13
119798-42200	32	1
119798-42210	32	3
119798-42260	32	4
119798-42270	32	5
119798-42310	32	6
119798-42330	32	7
119798-42340	32	8
119798-42350	32	9
119798-42360	32	10
119798-44010	35	2
119798-44050	35	3
119798-44060	35	4
119798-44190	35	5
119798-44220	35	6
119798-44250	35	7

Parts No.	Fig. No.	Ref. No.
119798-44260	35	8
119798-44270	35	9
119798-44280	35	10
119798-44290	35	11
119798-44400	35	12
119798-44500	35	1
119798-44630	35	13
119798-44640	35	14
119798-48360	34	1
119798-48510	35	15
119798-48520	34	2
119798-48530	40	5
119798-48540	34	3
119798-49080	36	3
	37	3
119798-49090	36	4
	37	4
119798-49110	40	6
119798-49140	40	9
119798-49200	40	12
119798-49270	40	13
119798-49280	40	16
119798-49290	40	17
119798-49310	40	22
119798-49320	36	6
	37	6
119798-49360	40	23
119798-49420	40	24
119798-49470	12	39
119798-49480	12	40
119798-49600	41	2
119798-49610	41	3
119798-49620	41	4
119798-49630	41	5
119798-49640	41	6
119798-49650	41	7
119798-49660	41	8
119798-49670	41	9
119798-49680	41	10
119798-49690	41	11
119798-49700	41	12
119798-49710	41	13
119798-49720	6	31
	17	12
	41	14
119798-49730	41	15
119798-49740	41	16
119798-49770	36	7
	37	7
119798-49790	36	8

Parts No.	Fig. No.	Ref. No.
119798-49790	37	8
119798-49810	24	9
119798-49820	24	10
119798-49830	24	11
119798-49840	41	17
119798-49850	24	12
119798-49860	24	13
	41	18
	44	2
		12
		13
	66	21
119798-49870	41	19
119798-49880	36	11
119798-49890	36	26
119798-49900	42	8
119798-49910	34	6
119798-49920	36	18
119798-49930	36	21
119798-49940	36	12
119798-49950	42	3
119798-49960	42	4
119798-49970	42	5
119798-51010	44	3
119798-51020	44	4
119798-51030	44	5
119798-51040	44	6
119798-51050	44	7
119798-51060	44	8
119798-51070	44	9
119798-51080	44	10
119798-53010	45	2
119798-53020	45	3
119798-53030	45	4
119798-53040	45	5
119798-53050	45	6
119798-53060	45	7
119798-53070	44	14
	45	8
119798-53080	44	15
	45	9
119798-53090	45	10
119798-53100	45	11
119798-55100	47	1
119798-55110	47	2
119798-55120	47	4
119798-55130	47	6
119798-55140	47	7
119798-55150	47	8
119798-55160	47	9

Parts No. Index

Parts No.	Fig. No.	Ref. No.
119798-55170	47	10
119798-55180	47	11
119798-55190	47	12
119798-55720	36	13
	38	13
	48	2
	52	2
119798-55770	38	14
	48	3
	52	3
119798-55780	38	15
	48	4
	52	4
119798-59010	44	16
119798-59020	44	17
119798-59030	44	18
119798-59040	44	19
119798-59050	44	20
119798-59060	44	21
119798-59070	44	22
119798-59080	44	23
119798-59090	44	24
119798-59100	41	20
	44	25
		26
119798-59110	44	27
119798-59120	44	28
119798-59140	44	29
119798-59150	44	30
119798-59160	44	31
119798-59170	44	32
119798-59190	44	33
119798-59230	46	4
119798-59250	46	5
119798-59510	46	7
119798-59520	46	8
119798-59550	46	17
119798-59570	46	18
119798-59610	46	19
119798-59620	46	20
119798-59810	44	34
119798-59820	44	35
119798-59830	44	36
119798-59840	41	21
	44	37
119798-59910	35	17
119798-75100	64	1
119798-75200	64	6
119798-75300	64	11
119798-77010	61	1

Parts No.	Fig. No.	Ref. No.
119798-77020	61	13
119798-77030	61	14
119798-77050	66	22
119798-77061	66	5
119798-77071	66	10
119798-77081	66	11
119798-77090	66	12
119798-77100	68	2
		15
119798-77110	68	3
		16
119798-77120	61	2
119798-77140	61	3
119798-77150	61	4
119798-77160	61	5
119798-77170	61	6
119798-77180	61	7
119798-77190	61	8
119798-77200	62	1
119798-77210	62	17
119798-77220	62	18
119798-77230	62	2
119798-77240	62	3
119798-77250	62	4
119798-77260	62	5
119798-77270	62	7
119798-77280	62	8
119798-77290	62	9
119798-77300	62	10
119798-77310	62	11
119798-77320	62	12
119798-77330	62	13
119798-77340	62	14
119798-77350	62	19
119798-77360	62	6
119798-77370	62	15
119798-77380	62	16
119798-77390	61	9
119798-77400	61	10
119798-77410	61	11
119798-77420	61	12
119798-77530	68	7
119798-77540	68	8
119798-77550	68	9
119798-77650	65	1
119798-77710	65	2
119798-77720	65	3
119798-77731	65	4
119798-77740	65	5
119798-77760	69	1

Parts No.	Fig. No.	Ref. No.
119798-77800	64	20
119798-77870	69	2
119798-77880	64	23
119798-77900	65	6
119798-77910	50	1
119798-77920	50	2
119798-77930	50	3
119798-77990	61	15
119798-81110	54	1
119798-81120	54	2
119798-81130	54	3
119798-81160	54	4
119798-81170	54	5
119798-81180	54	6
119798-81210	54	7
119798-81220	54	8
119798-81230	54	9
119798-81240	54	10
119798-81260	54	11
119798-81270	54	12
119798-81280	54	13
119798-81290	54	14
119798-85530	59	2
119798-91120	67	1
119798-91130	67	2
119798-91140	67	3
119798-91500	67	4
119798-91510	67	5
119798-91600	6	26
119798-91630	17	14
119798-91640	17	15
119798-91650	2	39
119798-91660	2	40
119798-91700	67	6
119798-92100	70	10
119798-92120	70	11
119799-01610	4	3
119799-13350	12	31
	13	13
		32
119799-13370	12	33
	13	15
		34
119799-13540	12	35
119799-13550	12	36
	13	17
119799-13560	13	36
119799-13640	13	27
119799-13650	13	18
119799-18710	11	8

Parts No.	Fig. No.	Ref. No.
119799-18720	13	20
119799-21520	60	1
119799-26100	51	1
119799-26110	51	2
119799-26150	53	1
119799-26160	71	1
119799-26170	53	3
119799-26200	51	3
119799-26210	51	3 -1
119799-26520	53	9
119799-26530	52	9
119799-26540	53	10
	71	2
119799-26550	53	11
	71	3
		5
119799-26570	53	13
	71	6
119799-26580	38	11
	53	14
119799-26600	53	12
	71	4
119799-26800	48	1
	52	1
119799-49250	36	25
	37	14
119799-49610	38	6
119799-49620	38	7
119799-49640	38	8
119799-49740	37	15
119799-49780	13	39
119799-49800	38	12
119799-49810	39	3
		9
119799-49820	39	10
119799-49830	39	11
119799-59210	46	2
	53	18
119799-59220	46	3
119799-59250	71	10
119799-59600	46	9
120130-39990	30	2
120324-07240	7	6
120324-55751	49	2
120324-55760	49	3
120325-92110	70	1
120445-44540	35	28
120445-49150	40	10
120650-42630	38	1
121550-49111	34	4

Parts No. Index

Parts No.	Fig. No.	Ref. No.
121550-49111	35	16
	40	7
121575-49310	53	17
	66	2
123325-59420	49	16
123672-55811	49	15
124060-01050	57	5
	58	12
124413-39100	30	1
124790-44560	35	29
127488-18910	15	5
127610-39350	46	10
127620-49720	12	41
127677-77110	66	7
127677-77120	66	8
127677-77130	66	9
127677-77330	68	6
127687-18910	15	6
127687-39360	46	11
128171-07150	7	5
128275-49900	42	9
128296-07190	7	14
128296-07260	7	7
128296-07300	7	8
128296-07350	7	9
128296-07400	7	15
128296-07420	7	16
128296-07450	7	17
128296-07460	7	18
129670-49290	40	18
148616-59430	46	6
	53	19
	71	11
148688-39320	29	9
177035-02920	57	6
	58	13
177040-04571	56	30
177040-04630	56	34
	57	19
	58	26
177040-04640	56	35
177057-04620	56	33
177061-04490	56	9
177068-04370	57	12
	58	19
177068-04380	57	13
	58	20
177068-04481	56	8
177068-04492	56	21
177068-04871	57	31

Parts No.	Fig. No.	Ref. No.
177068-04881	58	28
177129-04690	58	6
177129-04830	57	55
	58	27
177503-04183	57	7
	58	14
177503-04200	57	8
	58	15
177503-04211	58	16
177503-04260	57	10
	58	17
177510-04560	56	25
177511-04920	58	29
177523-02911	57	3
	58	2
177523-03800	58	4
177523-04100	58	3
177523-04110	58	5
177523-04250	57	9
177523-04260	57	11
177523-04350	58	16 -1
177523-04360	58	18
177523-04401	58	11
177523-04402	58	11 -1
177523-04403	58	11 -2
177523-04430	58	65
177523-04440	58	63
177523-04460	58	64
177523-04502	57	4
177523-04503	57	4 -1
177523-04520	57	16
	58	23
177523-04530	57	17
	58	24
177523-04540	57	18
	58	25
177523-04580	58	70
177523-04590	58	71
177523-04610	57	56
177523-04640	57	20
177523-04650	57	21
177523-04670	57	23
177523-04690	57	27
177523-04870	57	32
177523-04880	57	55 A
	58	62 A
177524-02210	55	2
177524-02221	55	3
177524-02230	55	4
177524-03701	55	5

Parts No.	Fig. No.	Ref. No.
177524-04420	56	7
	57	14
	58	21
177524-04471	56	6
177524-04481	56	4
177524-04491	56	5
177524-04531	56	46
	57	2
	58	69
177524-04540	56	20
177524-04552	56	23
177524-04560	56	27
177524-04570	56	28
177524-04590	56	29
177524-04620	56	31
177524-04630	56	32
177524-04720	56	26
194170-65891	7	2
194250-51660	8	2
	66	3
194440-51620	58	41
194555-77120	57	39
	58	42
196346-34860	52	10
196350-23010	60	2
196630-12980	7	13
1E8230-84490	69	3
1K1140-82500	68	10
1R1808-00900	64	30
22113-080000	12	8
		25
		42
	13	8
		22
		40
22113-100000	13	28
22117-100000	3	3
	57	55 B
	58	62 B
22133-100000	69	4
22137-080000	27	7
	49	17
22137-160000	5	8
22137-240000	5	9
22157-080000	63	6
	64	26
22190-140002	46	15
22190-140006	53	20
	71	12
22190-160006	53	4

Parts No.	Fig. No.	Ref. No.
22190-160006	53	21
	71	13
22212-050000	56	10
22212-080000	32	12
22213-060000	32	13
22217-040000	58	7
22217-060000	65	8
22217-080000	49	18
22217-100000	3	4
	57	55 C
	58	62 C
22252-000620	32	14
22312-040100	56	36
22351-040012	56	37
22512-070160	32	15
23000-025000	8	3
23000-028000	29	13
23010-013000	35	30
23064-100200	27	8
23080-008000	67	7
23080-013000	27	9
23297-250081	58	72
23297-350121	57	55 D
	58	62 D
23414-080000	46	21
23414-100000	29	14
		15
	57	33
	58	43
23414-100014	46	13
23414-120000	29	16
	57	34
	58	44
		68
	67	8
23414-130000	12	15
		26
		43
	13	23
		41
	48	5
	52	5
23414-140000	49	19
23414-160000	57	35
	58	45
23414-170000	16	17
23414-180000	57	36
	58	46
23857-060000	29	17
	57	37

Parts No. Index

Parts No.	Fig. No.	Ref. No.
23857-080000	49	20
23857-100000	53	22
	57	38
	71	14
23876-030000	16	3
		6
23887-100002	57	40
	58	47
23887-120002	58	48
23893-020002	12	16
		27
		44
	13	24
		42
23894-020002	48	6
	52	6
23894-030002	16	18
24104-062064	32	16
24190-070001	46	14
24190-090001	57	41
	58	49
24311-000090	56	38
		39
	57	42
	58	50
24311-000100	57	24
		43
	58	51
24311-000120	56	40
	57	44
	58	52
24311-000180	57	45
	58	53
24311-000210	56	41
	57	46
	58	54
24311-240100	57	25
24321-000400	35	18
	57	47
	58	55
24321-000700	32	17
24351-190160	51	4
	57	26
24356-190110	53	5
24356-190130	26	7
		16
	53	6
24356-240310	28	4
24421-254008	32	18
26013-060102	57	48

Parts No.	Fig. No.	Ref. No.
26013-060102	57	48 -1
	58	56
		62 G
26016-080602	56	47
26016-080802	56	48
26106-060102	29	18
	65	9
	66	15
26106-060122	26	8
		17
	36	9
	37	9
	56	42
	66	16
	67	9
	68	11
	69	5
26106-060162	3	8
	56	43
	66	17
26106-060182	67	10
26106-060202	52	11
26106-060252	57	49
	58	57
	65	10
	69	6
26106-060352	14	15
26106-060402	3	9
26106-060552	57	50
	58	58
26106-080102	64	27
	66	18
26106-080122	51	5
	52	12
	65	11
26106-080142	32	19
26106-080162	13	25
	20	4
	26	9
		18
	27	10
	28	5
	29	19
	32	22
	36	14
	38	16
	40	25
	48	7
	52	7
	53	23

Parts No.	Fig. No.	Ref. No.
26106-080162	58	73
26106-080182	16	19
	38	10
26106-080202	12	9
	13	9
	16	20
	20	5
	36	15
	38	17
	48	8
	52	8
26106-080252	15	7
	20	6
	28	6
	34	7
	35	19
26106-080302	55	9
	64	28
26106-080352	14	16
	28	7
	35	20
	47	13
	53	24
26106-080402	32	23
	49	21
	71	15
26106-080502	35	21
26106-080552	35	22
26106-080602	32	24
26106-080702	35	23
26106-081052	27	11
26106-100202	49	22
26106-100252	5	5
	38	18
	53	25
26106-100352	14	17
	55	10
26113-060122	32	20
26113-080162	12	10
		28
		45
	13	10
		26
		43
26113-080202	32	21
26116-080202	56	11
26116-081402	27	12
26116-100202	57	55 E
	58	62 E
26116-100504	70	2

Parts No.	Fig. No.	Ref. No.
26136-100202	69	7
26136-100252	20	7
26136-100302	59	3
	60	3
26136-100402	14	18
26136-100702	35	24
	62	20
26136-120452	4	2
		6
26216-080202	63	7
26223-080182	10	25
26226-080162	21	4
26306-080002	49	23
26366-060002	65	12
	66	19
26366-080002	21	5
	28	8
	42	6
	63	8
	64	16
		29
26376-100002	3	5
	16	21
	51	6
26376-120002	53	26
26450-050082	57	51
	58	59
26450-060162	29	20
26450-080952	57	57
	58	74
26453-100302	13	29
26557-040082	65	13
26557-040102	68	12
26557-040122	58	8
26557-050102	68	13
26557-050162	56	12
26557-050202	69	8
26657-100002	57	52
	58	60
26703-080002	10	26
26706-100002	49	24
26716-040002	58	9
26716-050002	56	13
26716-080002	56	14
26716-100002	57	55 F
	58	62 F
26756-100002	57	53
	58	61
26776-100002	56	44
26776-240002	5	10

Parts No. Index

Parts No.	Fig. No.	Ref. No.
26911-100222	57	54
	58	62
28110-080100	70	6
28110-100130	70	7
28110-120140	70	8
28110-170190	70	9
29622-140001	39	12
41701-001720	56	15
41710-000410	56	16
41710-000790	56	45
43530-500610	43	1
43662-030031	43	2
43730-552161	12	46
	36	16
		19
		22
		27
719195-92500	70	3
720445-44200	35	25
777522-04712	57	1
777522-04713	57	1 -1
777523-04810	58	1
777523-04811	58	1 -1
777524-02121	55	1
777524-04430	56	1
777524-04440	56	2
777524-04460	56	3
977780-01211	31	1
977780-03000	31	9
X0044021509	31	7
X0225000630	35	27
X0300120414	49	9
X0311121522	49	7
X0313080922	49	13
X0314080110	49	11
X0318101004	31	2
X0580121073	49	8
X0582810173	49	6
X0588080273	49	12
X0600160122	49	10
X0993071171	49	14
X158606410X	31	3
X179100022X	31	5
X179100100X	31	6
X199906101X	31	8
X2740134002	49	4
X8636015001	31	4

Parts No.	Fig. No.	Ref. No.

Parts No.	Fig. No.	Ref. No.

Parts No.	Fig. No.	Ref. No.