YANMAR

PARTS CATALOG

0CR10-M54200EN

Last update Dec., 2014

Introduction

1. This parts catalog is a first edition for the 6LP-DTE,6LP-DTZE,6LP-DTZE1,6LP-DTP, 6LP-DTZP,6LP-DTZP1,6LP-STE,6LP-STZE,6LP-STZE1,6LP-STP,6LP-STZP,6LP-STZP1 Disel engine.

	Parts catalog No.	Date of issue	Remarks
First edition	000Y00R5420	Oct.,2001	

2. Standard finish color. : Urethan metallic ecole silver

3. This parts catalog dose not contain the technical date needed for servicing.

4. The illustrations used in this parts catalog have been simplified for clarity.

5. The essential points list.

Name of Diesel engine		6LP-DTE(P)	6LP-DTZE(P)	6LP-DTZE(P)1	6LP-STE(P)	6LP-STZE(P)	6LP-STZE(P)1
Type		Vertical,water-cooled,four-cycle Diesel engine					
No.of cylinder —internal diameter(mm) ×Stroke length(mm)		6 —94 ×100					
Continuous rated output	KW/min^{-1} (PS/rpm)	154/3600 (210/3600)			188/3600 (255/3600)		
Combustion system		Direct injection					
Starting system		Erectric starting 12V-2.5kw					
Power take-off position		Flywheel side					
Cooling system		High temperature(Filterd sea water) cooling					
Lubricationg system		Fully sealed,forced-feed lubrication					

6. The contents of this parts catalog are subject to change without prior notice.

7. Be sure to use only genuine Yanmar part for repairs. If other parts are used, the life of the engine may be shortened.

1. Selective Combinations Crankshaft Journal Bearings

Selective Combinations Crankshaft Journal Bearings

The crankshaft journal bearings of the 6LP series employ the selective combinations. The combinations as follows. The block journal biameter codes are shown on the ladder frame (bearing cap) and the crank journal diameter codes are punched on the crank.
When applying a crankshaft journal bearings, there is the necessity of asking for the crankshaft journal bearings which suits on the table of Table 1. Since the combination is indicated to Table 2, please determine from this.

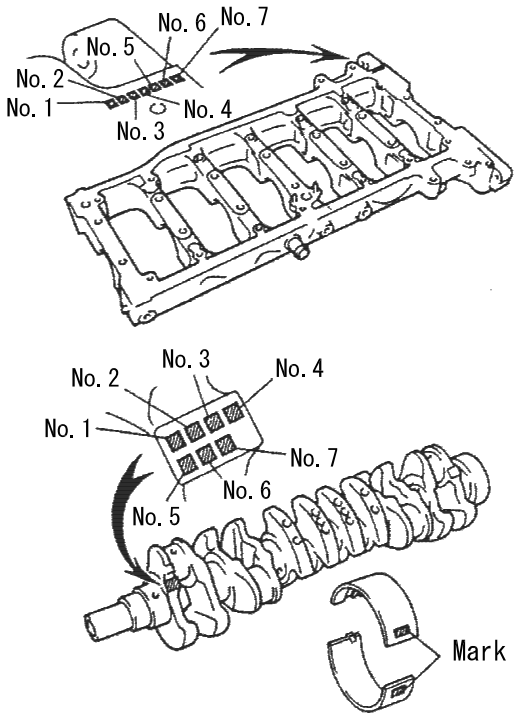

Crankshaft bearing mark position

Table1—Crankshaft Journal Bearing Selection Table

Cylinder Block Journal Mark	Crankshaft Main Journal Mark																	
	A	B	C	D	E	H	4	5	6	7	8	9	L	M	R	S	U	X
A	2	2	2	2	2	2	3	3	3	3	3	3	4	4	4	4	4	4
B	2	2	2	2	2	3	3	3	3	3	3	4	4	4	4	4	4	5
C	2	2	2	2	3	3	3	3	3	3	4	4	4	4	4	4	5	5
D	2	2	2	3	3	3	3	3	3	4	4	4	4	4	4	5	5	5
E	2	2	3	3	3	3	3	3	4	4	4	4	4	4	5	5	5	5
H	2	3	3	3	3	3	3	4	4	4	4	4	4	5	5	5	5	5
4	3	3	3	3	3	3	4	4	4	4	4	4	5	5	5	5	5	5
5	3	3	3	3	3	4	4	4	4	4	4	5	5	5	5	5	5	6
6	3	3	3	3	4	4	4	4	4	4	5	5	5	5	5	5	6	6
7	3	3	3	4	4	4	4	4	4	5	5	5	5	5	5	6	6	6
8	3	3	4	4	4	4	4	4	5	5	5	5	5	5	6	6	6	6
9	3	4	4	4	4	4	4	5	5	5	5	5	5	6	6	6	6	6
L	4	4	4	4	4	4	5	5	5	5	5	5	6	6	6	6	6	7
M	4	4	4	4	4	5	5	5	5	5	5	6	6	6	6	6	7	7
R	4	4	4	4	5	5	5	5	5	5	6	6	6	6	6	7	7	7
S	4	4	4	5	5	5	5	5	5	6	6	6	6	6	6	7	7	7
U	4	4	5	5	5	5	5	5	6	6	6	6	6	6	7	7	7	7
X	4	5	5	5	5	5	5	6	6	6	6	6	6	7	7	7	7	7

Table2—Crankshaft Journal Bearing Parts Codes

Parts No.	Parts name	Mark No.	Remarks
119770-00961	BEARING SET, MARK 2	Mark "2"	T=1.982-1.985
119770-00971	BEARING SET, MARK 3	Mark "3"	T=1.985-1.988
119770-00981	BEARING SET, MARK 4	Mark "4"	T=1.988-1.991
119770-00991	BEARING SET, MARK 5	Mark "5"	T=1.991-1.994
119770-01001	BEARING SET, MARK 6	Mark "6"	T=1.994-1.997
119770-01170	BEARING SET, MARK 7	Mark "7"	T=1.997-2.000

2. Selective Combinations Crank Pin Bearings

(1) Always replace bearings with those having the same number.
If the bearing number is unknown, add numbers indicated on the crankshaft and connecting rod and select a bearing having a number equal to that obtained by addition.
There are five types of standard bearings, which are identified by marks "2","3","4","5" and "6".

(Selecting the crank pin bearing)

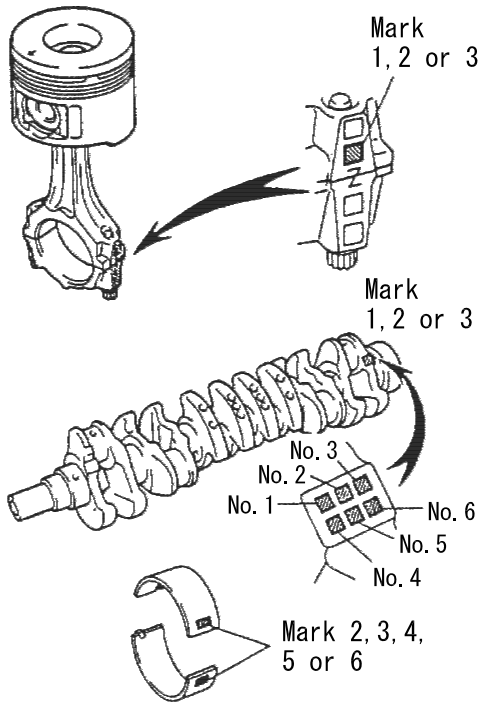

(2) Crank pin bearing serection table

	Mark No.								
Connecting rod	1			2			3		
Crankshaft	1	2	3	1	2	3	1	2	3
Bearing	2	3	4	3	4	5	4	5	6

Example: Assume that indications on connecting rod and crankshaft are "2" and "1", select bearing "3"("2"+"1"="3").

(3) Crank pin bearing parts number list (mm)

Parts No.	Parts name	Mark No.	Remarks
119770-00260	BEARING SET, MARK 2	Mark "2"	1.486-1.489
119770-01010	BEARING SET, MARK 3	Mark "3"	1.489-1.492
119770-01020	BEARING SET, MARK 4	Mark "4"	1.492-1.495
119770-01030	BEARING SET, MARK 5	Mark "5"	1.459-1.498
119770-01040	BEARING SET, MARK 6	Mark "6"	1.498-1.501

Contents

0CR10-M54200

Fig. No.	Fig. Name
6LP(A)-DT/ST/(Z)E(P)(1)	
1.	CYLINDER BLOCK
2.	GEAR HOUSING(6LP-DT(Z)E(P)1)
3.	GEAR HOUSING(6LP-ST(Z)E(P)1)
4.	FLYWHEEL HOUSING
5.	MOUNTING FOOT
6.	LUB. OIL SUMP
7.	LABEL
8.	BREATHER
9.	TURBINE
10.	EXHAUST BEND
11.	AIR COOLER
12.	AIR DUCT
13.	BOOST CONTROL
14.	EXHAUST MANIFOLD
15.	SUCTION MANIFOLD
16.	CYLINDER HEAD(6LP-DT(Z)E(P)1)
17.	CYLINDER HEAD(6LP-ST(Z)E(P)1)
18.	ENGINE LIFTER
19.	CAMSHAFT(6LP-DT(Z)E(P)1)
20.	CAMSHAFT(6LP-ST(Z)E(P)1)
21.	CRANKSHAFT
22.	DAMPER
23.	PISTON & CONNECTING ROD
24.	LUB. OIL COOLER
25.	LUB. OIL COOLER(6LP-ST(Z)E(P)1)
26.	LUB. OIL COOLER COVER(6LP-DT(Z)
27.	LUB. OIL COOLER COVER(6LP-ST(Z)
28.	LUB. OIL PIPE
29.	LUB. OIL PIPE(TURBINE)
30.	OIL SUCTION/DRAIN PUMP
31.	COOLING SEA WATER PUMP
32.	COOLING FRESH WATER PUMP
33.	THERMOSTAT
34.	COOLING FRESH WATER COOLER
35.	COOLING SEA WATER PIPE(6LP-DTE(P))
36.	COOLING SEA WATER PIPE(6LP-DTZE(P)1)
37.	COOLING SEA WATER PIPE(6LP-STE(P))
38.	COOLING SEA WATER PIPE(6LP-STZE(P)1)
39.	COOLING FRESH WATER PIPE
40.	COOLING FRESH WATER WATER PIPE(TURBINE)
41.	BILGE PUMP(STD,OPTIONAL)
42.	BILGE PUMP(DX,OPTIONAL)
43.	FUEL INJECTION PUMP
44.	FUEL INJECTION VALVE (6LP-DT(Z)E(P)1)
45.	FUEL INJECTION VALVE (6LP-ST(Z)E(P)1)
46.	FUEL INJECTION PIPE(6LP-DT(Z)E(P)1)
47.	FUEL INJECTION PIPE(6LP-ST(Z)E(P)1)
48.	FUEL PIPE
49.	FUEL STRAINER

Contents

Fig. No.	Fig. Name
50.	FUEL COOLER
51.	GLOW PLUG
52.	CABLE BRACKET
53.	POWER STEERING PUMP
54.	POWER STEERING COOLER & TANK
55.	ATF PIPE
56.	CLUTCH & DRIVE ATTACHMENT
57.	STARTING MOTOR
58.	GENERATOR
59.	INSTRUMENT PANEL(B-TYPE,OPTIONAL)
60.	INSTRUMENT PANEL(C-TYPE,ONPTONAL)
61.	INSTRUMENT PANEL(D-TYPE,ONPTONAL)
62.	WIRE HARNESS & SENSOR
63.	SENSOR MOUNT
64.	TOOL(OPTIONAL)
65.	SPARE PART(OPTINAL)

Fig. No.	Fig. Name

Fig.1. CYLINDER BLOCK

P/C NEWS No:Y00R5420-3
PUBLISHED:2005/3

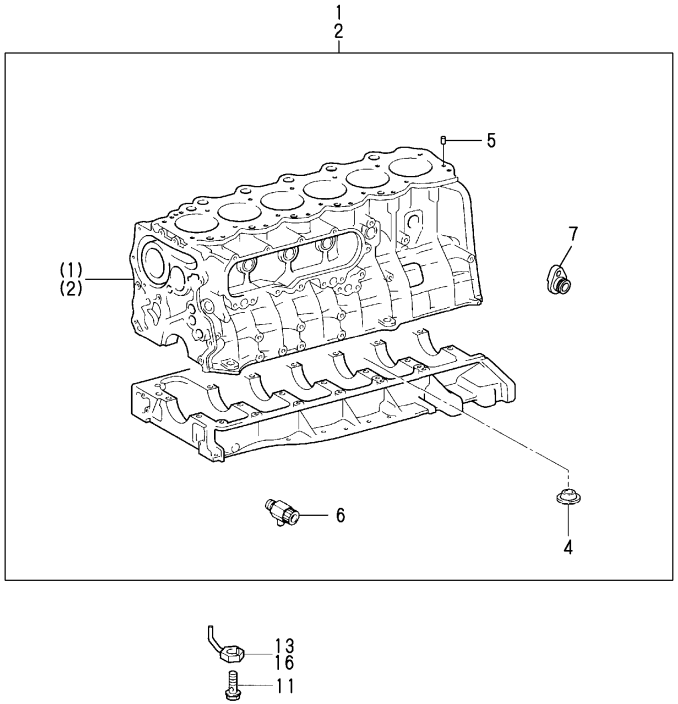

(A)=6LP(A)-DTE(P (D)=6LP(A)-STE(P
(B)=6LP(A-DTZE(P (E)=6LP(A-STZE(P
(C)=6LP(A-DTZEP1 (F)=6LP(A-STZEP1

No.	Lev.	Parts No.	Description	Q'ty (A)	(B)	(C)	(D)	(E)	(F)	I	R
1	1	119770-10050	BLOCK ASSY, CYLINDER	1	1	1					
2	1	119771-10040	BLOCK ASSY, CYLINDER				1	1	1		
4	2	119770-00110	GASKET	1	1	1	1	1	1		
5	2	119770-00100	ORIFICE	1	1	1					
6	2	119770-90990	COCK ASSY, DRAIN	1	1	1	1	1	1		
7	2	119770-01160	HOLE, PLUG	1	1	1					
8	2	119770-91000	O-RING	1	1	1					1
9	2	119770-91010	BOLT	1	1	1					1
9-1	2	119770-91011	BOLT	1	1	1				N	1
	(A=*2003.06)	(B=*2003.06)	(C=*2003.06)								
11	1	119771-00320	VALVE ASSY, OIL				6	6	6		
13	1	119771-00330	NOZZLE ASSY				6	6	6		
16	1	119770-00720	NOZZLE ASSY	6	6	6					

Remarks
(1)NOT ILLUSTRATED.

N:Old $\frac{\text{Yes}}{\text{No}}$ New, Q:Old $\frac{\text{No}}{\text{Yes}}$ New, R:Old $\frac{\text{Yes}}{\text{Yes}}$ New, S:Old $\frac{\text{No}}{\text{No}}$ New, W:Add, Z:Discontinued, F:Interchangeable by set, K:Q'ty Change

Copyright (C) YANMAR CO., LTD. All RightsReserved.

Fig.2. GEAR HOUSING(6LP-DT(Z)E(P)1)

P/C NEWS No:Y00R5420-6
PUBLISHED:2006/6

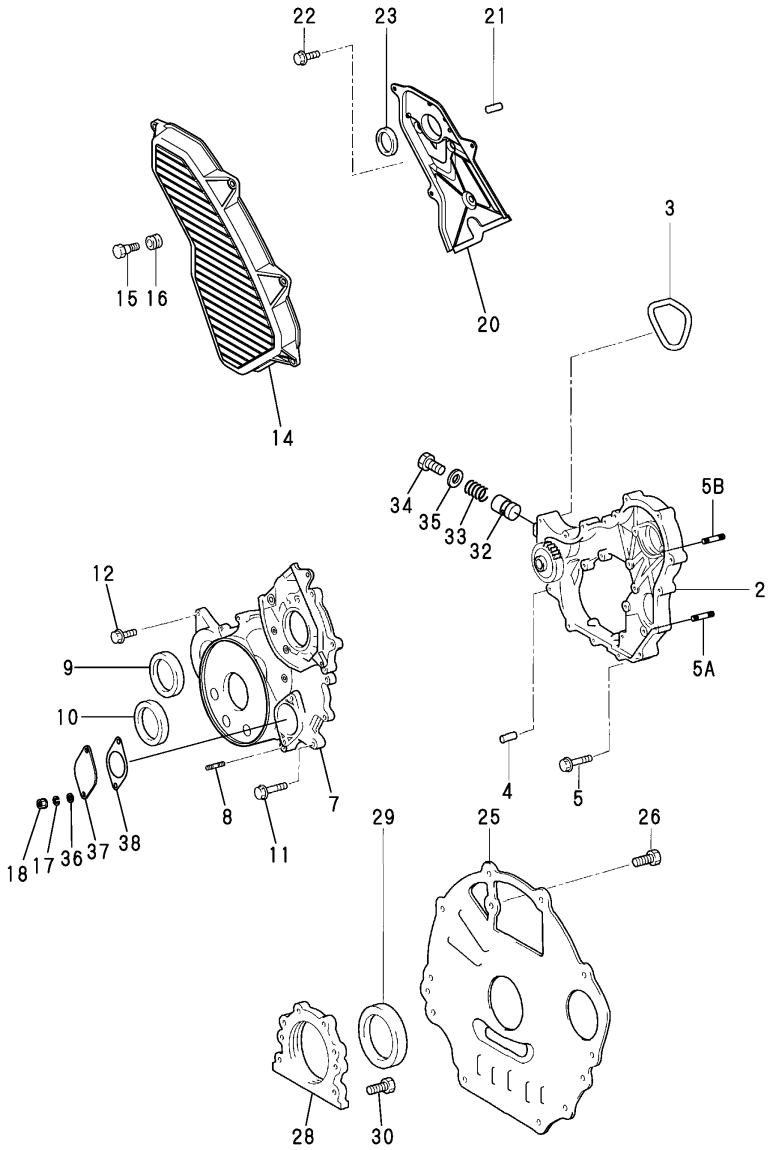

(A)=6LP(A)-DTE(P (D)=6LP(A)-STE(P
(B)=6LP(A-DTZE(P (E)=6LP(A-STZE(P
(C)=6LP(A-DTZEP1 (F)=6LP(A-STZEP1

No.	Lev.	Parts No.	Description	Q'ty (A)	(B)	(C)	(D)	(E)	(F)	I	R
2	2	119771-00060	CASE ASSY, TIMING	1	1	1					
3	2	119770-00160	GASKET	1	1	1					
4	2	119770-90250	PIN, PARALLEL	1	1	1					
5	2	119770-90260	BOLT	7	7	7					
5A	2	119770-01210	STUD, D10XL40	2	2	2				W	
	(A=FROM 1ST)	(B=FROM 1ST)	(C=FROM 1ST)								
5B	2	119770-01220	BOLT	2	2	2				W	
	(A=FROM 1ST)	(B=FROM 1ST)	(C=FROM 1ST)								
7	2	119771-00071	COVER	1	1	1					
8	2	119770-90270	STUD, D10XL45.6	2	2	2					
9	2	119770-90280	SEAL, OIL	1	1	1					
10	2	119770-90290	SEAL, OIL	1	1	1					
11	2	119770-90300	BOLT	9	9	9					
12	2	119770-90310	BOLT	6	6	6					
14	2	119770-00181	COVER, BELT	1	1	1					
15	2	119770-90320	BOLT	6	6	6					
16	2	119770-90330	WASHER	6	6	6					
17	1	22217-100000	WASHER, SPRING 10	2	2	2					
18	1	26376-100002	NUT, M10	2	2	2					
20	2	119770-00211	RETAINER, CAMSHAFT	1	1	1					
21	2	119770-90020	PIN	2	2	2					
22	2	119770-90260	BOLT	4	4	4					
23	2	119770-90360	SEAL, OIL	1	1	1					
25	2	119770-00201	PLATE	1	1	1					
26	2	119770-90350	BOLT	1	1	1					
28	2	119770-00030	RETAINER, OIL SEAL	1	1	1					
29	2	119770-90090	SEAL, OIL	1	1	1					
30	2	119770-90100	BOLT	6	6	6					
32	2	119770-01240	VALVE, RELIEF	1	1	1				W	
	(A=FROM 1ST)	(B=FROM 1ST)	(C=FROM 1ST)								
33	2	119770-01250	SPRING	1	1	1				W	
	(A=FROM 1ST)	(B=FROM 1ST)	(C=FROM 1ST)								
34	2	119770-01260	PLUG	1	1	1				W	
	(A=FROM 1ST)	(B=FROM 1ST)	(C=FROM 1ST)								
35	2	119770-01270	GASKET	1	1	1				W	
	(A=FROM 1ST)	(B=FROM 1ST)	(C=FROM 1ST)								
36	1	22117-100000	WASHER, 10	2	2	2					
37	1	119773-01580	COVER	1	1	1					
38	1	119773-01590	GASKET	1	1	1					

N:Old $\frac{\text{Yes}}{\text{No}}$ New, Q:Old $\frac{\text{No}}{\text{Yes}}$ New, R:Old $\frac{\text{Yes}}{\text{Yes}}$ New, S:Old $\frac{\text{No}}{\text{No}}$ New, W:Add, Z:Discontinued, F:Interchangeable by set, K:Q'ty Change

Copyright (C) YANMAR CO., LTD. All RightsReserved.

Fig.3. GEAR HOUSING(6LP-ST(Z)E(P)1)

P/C NEWS No:Y00R5420-6
PUBLISHED:2006/6

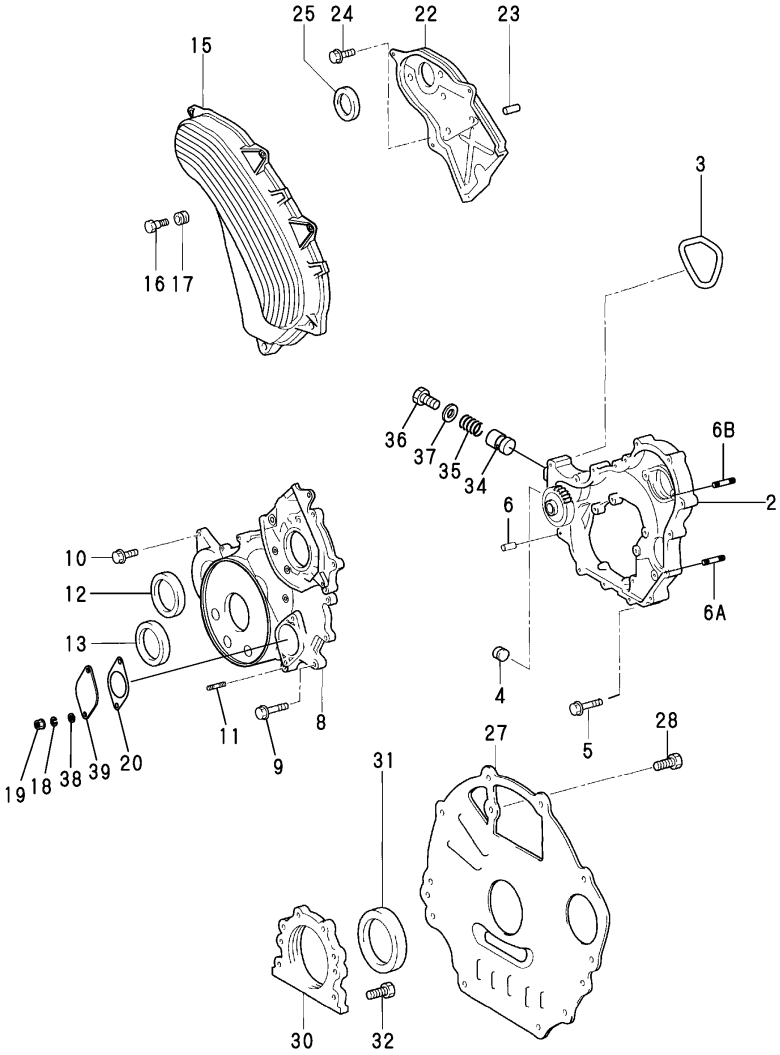

(A)=6LP(A)-DTE(P (D)=6LP(A)-STE(P
(B)=6LP(A-DTZE(P (E)=6LP(A-STZE(P
(C)=6LP(A-DTZEP1 (F)=6LP(A-STZEP1

No.	Lev.	Parts No.	Description	Q'ty (A)	(B)	(C)	(D)	(E)	(F)	I	R
2	2	119771-00060	CASE ASSY, TIMING				1	1	1		
3	2	119770-00160	GASKET				1	1	1		
4	2	119771-90110	PLUG				1	1	1		
5	2	119771-90120	BOLT				7	7	7		
6	2	119770-90250	PIN, PARALLEL				1	1	1		
6A	2	119770-01210	STUD, D10XL40				2	2	2	W	
			(D=FROM 1ST)		(E=FROM 1ST)			(F=FROM 1ST)			
6B	2	119770-01220	BOLT				2	2	2	W	
			(D=FROM 1ST)		(E=FROM 1ST)			(F=FROM 1ST)			
8	2	119771-00071	COVER				1	1	1		
9	2	119771-90130	BOLT				9	9	9		
10	2	119771-90140	BOLT				6	6	6		
11	2	119770-90270	STUD, D10XL45.6				2	2	2		
12	2	119770-90280	SEAL, OIL				1	1	1		
13	2	119770-90290	SEAL, OIL				1	1	1		
15	2	119771-00081	COVER, BELT				1	1	1		
16	2	119770-90320	BOLT				6	6	6		
17	2	119770-90330	WASHER				6	6	6		
18	1	22217-100000	WASHER, SPRING 10				2	2	2		
19	1	26376-100002	NUT, M10				2	2	2		
20	1	119773-01590	GASKET				1	1	1		
22	2	119771-00101	RETAINER, CAMSHAFT				1	1	1		
23	2	119770-90020	PIN				2	2	2		
24	2	119771-90120	BOLT				4	4	4		
25	2	119771-90160	SEAL, OIL				1	1	1		
27	2	119770-00201	PLATE				1	1	1		
28	2	119770-90350	BOLT				1	1	1		
30	2	119770-00030	RETAINER, OIL SEAL				1	1	1		
31	2	119770-90090	SEAL, OIL				1	1	1		
32	2	119770-90100	BOLT				6	6	6		
34	2	119770-01240	VALVE, RELIEF				1	1	1	W	
			(D=FROM 1ST)		(E=FROM 1ST)			(F=FROM 1ST)			
35	2	119770-01250	SPRING				1	1	1	W	
			(D=FROM 1ST)		(E=FROM 1ST)			(F=FROM 1ST)			
36	2	119770-01260	PLUG				1	1	1	W	
			(D=FROM 1ST)		(E=FROM 1ST)			(F=FROM 1ST)			
37	2	119771-01270	GASKET				1	1	1	W	
			(D=FROM 1ST)		(E=FROM 1ST)			(F=FROM 1ST)			
38	1	22117-100000	WASHER, 10				2	2	2		
39	1	119773-01580	COVER				1	1	1		

N:Old $\overset{\text{Yes}}{\underset{\text{No}}{\leftrightarrow}}$ New, Q:Old $\overset{\text{No}}{\underset{\text{Yes}}{\leftrightarrow}}$ New, R:Old $\overset{\text{Yes}}{\underset{\text{Yes}}{\leftrightarrow}}$ New, S:Old $\overset{\text{No}}{\underset{\text{No}}{\leftrightarrow}}$ New, W:Add, Z:Discontinued, F:Interchangeable by set, K:Q'ty Change

Copyright (C) YANMAR CO., LTD. All RightsReserved.

Fig.4. FLYWHEEL HOUSING

(A)=6LP(A)-DTE(P
(B)=6LP(A-DTZE(P
(C)=6LP(A-DTZEP1
(D)=6LP(A)-STE(P
(E)=6LP(A-STZE(P
(F)=6LP(A-STZEP1

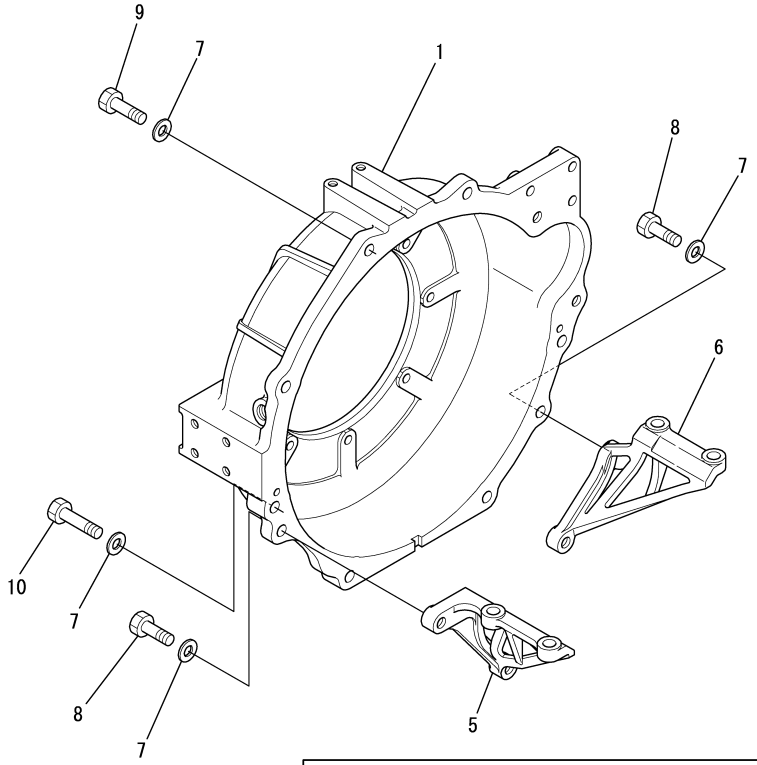

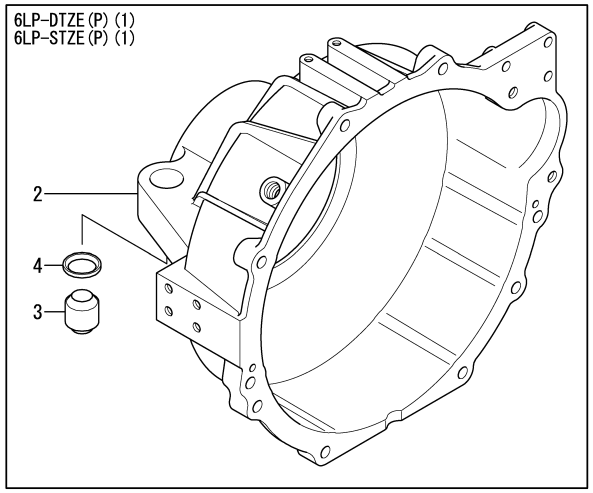

No.	Lev.	Parts No.	Description	Q'ty (A)	(B)	(C)	(D)	(E)	(F)	I	R
1	1	119773-01600	HOUSING, FLYWHEEL	1			1				
2	1	119778-01600	HOUSING, FLYWHEEL		1	1		1	1		
3	1	119778-08300	MOUNTING, FLEXIBLE		2	2		2	2		
4	1	119778-08350	SPACER		2	2		2	2		
5	1	119773-01651	PLATE, STIFFENER	1	1	1	1	1	1		
6	1	119773-01671	PLATE, STIFFENER	1	1	1	1	1	1		
7	1	22117-120000	WASHER, 12	13	13	13	13	13	13		
8	1	26156-120352	BOLT, M12X 35 PLATED	8	8	8	8	8	8		
9	1	26156-120402	BOLT, M12X 40 PLATED	3	3	3	3	3	3		
10	1	26156-120502	BOLT, M12X 50 PLATED	2	2	2	2	2	2		

N:Old ◄Yes/No► New, Q:Old ◄No/Yes► New, R:Old ◄Yes/Yes► New, S:Old ◄No/No► New, W:Add, Z:Discontinued, F:Interchangeable by set, K:Q'ty Change

Copyright (C) YANMAR CO., LTD. All RightsReserved.

Fig.5. MOUNTING FOOT

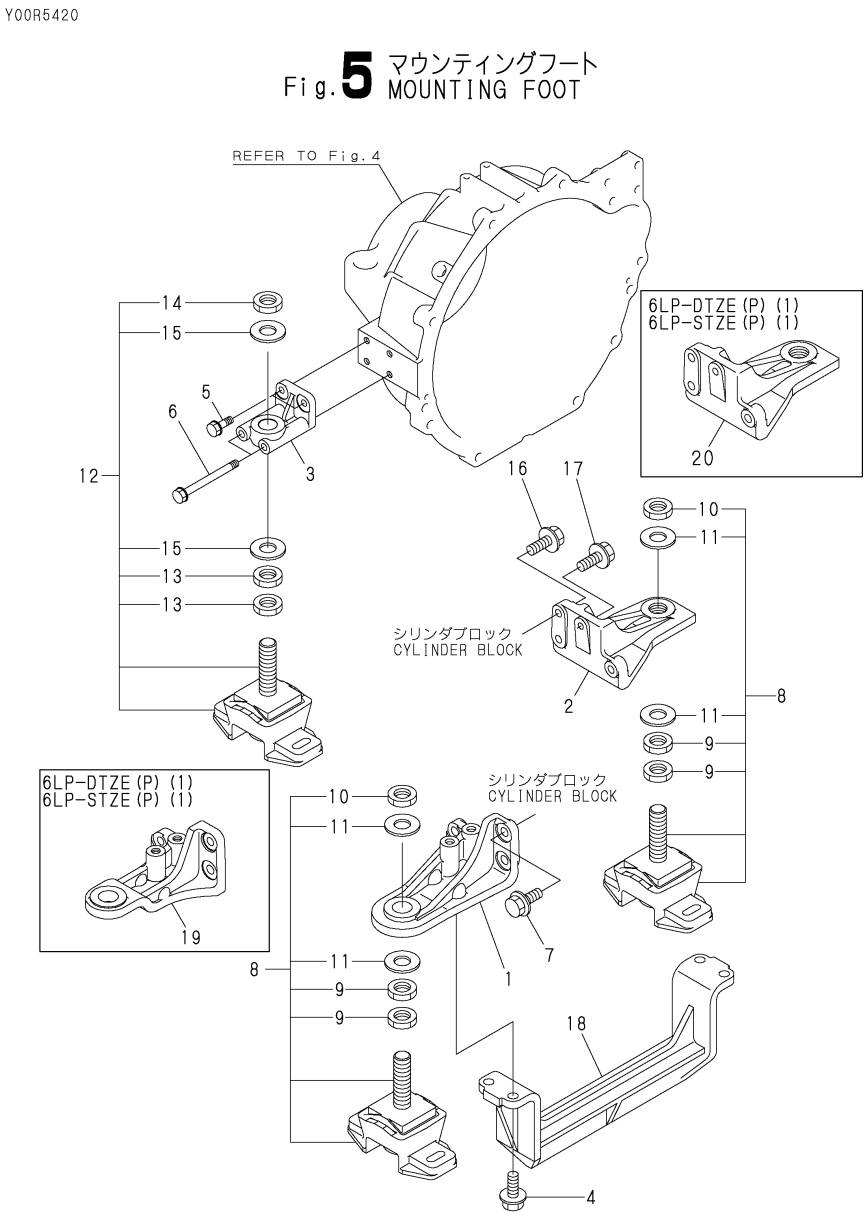

(A)=6LP(A)-DTE(P (D)=6LP(A)-STE(P
(B)=6LP(A-DTZE(P (E)=6LP(A-STZE(P
(C)=6LP(A-DTZEP1 (F)=6LP(A-STZEP1

No.	Lev.	Parts No.	Description	Q'ty (A)	(B)	(C)	(D)	(E)	(F)	I	R
1	1	119773-08101	FOOT, MOUNTING	1			1				
2	1	119773-08111	FOOT, MOUNTING	1			1				
3	1	119773-08200	FOOT, MOUNTING	2			2				
4	1	119775-08210	BOLT	4	4	4	4	4	4		
5	1	26106-100302	BOLT, M10X 30 PLATED	4			4				
6	1	26106-101102	BOLT, M10X110 PLATED	4			4				
7	1	119775-08220	BOLT	3	3	3	3	3	3		
8	1	119773-08300	MOUNTING, FLEXIBLE	2	2	2	2	2	2		
9	2	119773-08330	NUT	4	4	4	4	4	4		
10	2	119773-08340	NUT	2	2	2	2	2	2		
11	2	119773-08350	WASHER	4	4	4	4	4	4		
12	1	119773-08310	MOUNTING, FLEXIBLE	2			2				
13	2	119773-08330	NUT	4			4				
14	2	119773-08340	NUT	2			2				
15	2	119773-08350	WASHER	4			4				
16	1	119775-08230	BOLT	3	3	3	3	3	3		
17	1	26136-100352	BOLT, M10X 35 PLATED	1	1	1	1	1	1		
18	1	119778-08501	SUPPORT	1	1	1	1	1	1		
19	1	119793-08101	FOOT, MOUNTING		1	1		1	1		
20	1	119793-08111	FOOT, MOUNTING		1	1		1	1		

N:Old $\xleftrightarrow[\text{No}]{\text{Yes}}$ New, Q:Old $\xleftrightarrow[\text{Yes}]{\text{No}}$ New, R:Old $\xleftrightarrow[\text{Yes}]{\text{Yes}}$ New, S:Old $\xleftrightarrow[\text{No}]{\text{No}}$ New, W:Add, Z:Discontinued, F:Interchangeable by set, K:Q'ty Change

Copyright (C) YANMAR CO., LTD. All RightsReserved.

Fig.6. LUB. OIL SUMP

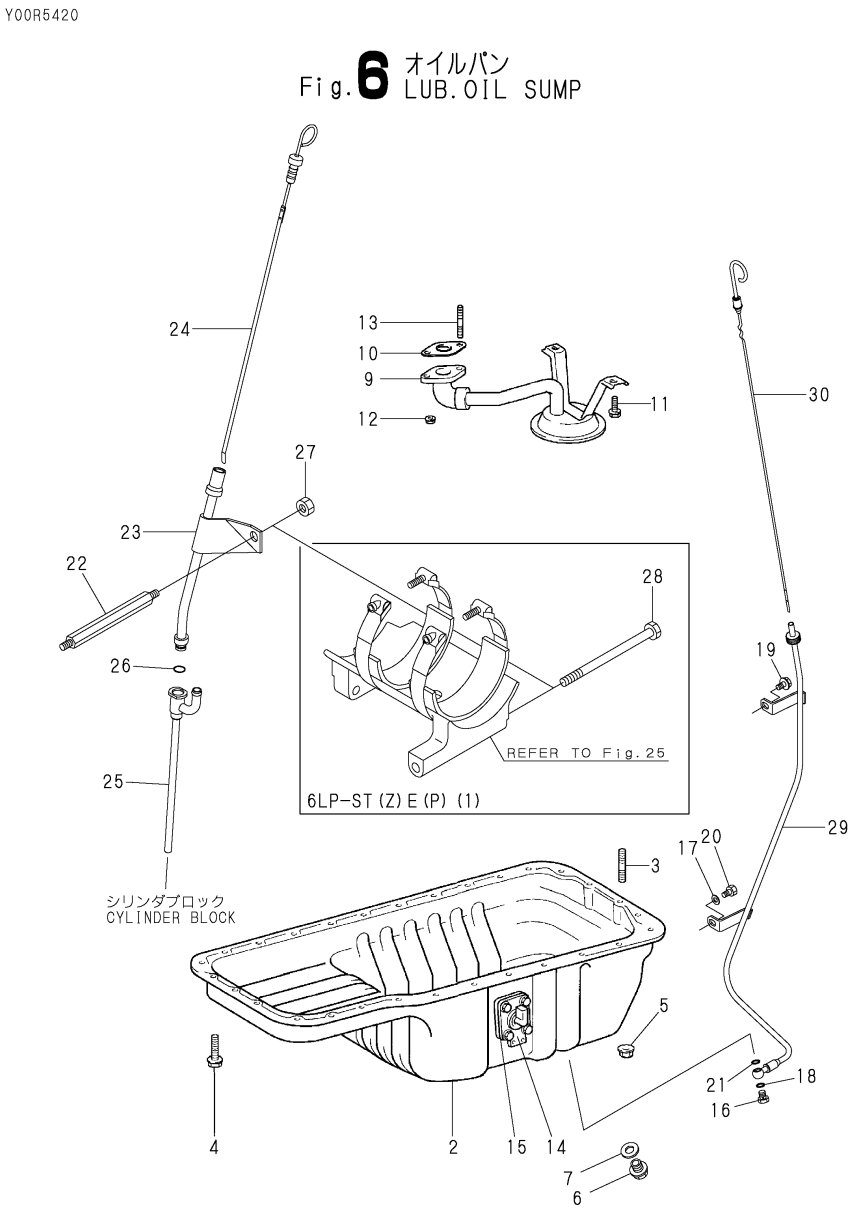

(A)=6LP(A)-DTE(P (D)=6LP(A)-STE(P
(B)=6LP(A-DTZE(P (E)=6LP(A-STZE(P
(C)=6LP(A-DTZEP1 (F)=6LP(A-STZEP1

No.	Lev.	Parts No.	Description	Q'ty (A)	(B)	(C)	(D)	(E)	(F)	I	R
2	2	119770-00230	SUMP ASSY, OIL	1	1	1	1	1	1		
3	2	119770-90370	STUD	3	3	3	3	3	3		
4	2	119770-90380	BOLT	27	27	27	27	27	27		
5	2	119770-90390	NUT	3	3	3	3	3	3		
6	2	119770-90400	PLUG	1	1	1	1	1	1		
7	2	119770-90410	GASKET	1	1	1	1	1	1		
9	2	119770-00620	STRAINER ASSY	1	1	1	1	1	1		
10	2	119770-00630	GASKET	1	1	1	1	1	1		
11	2	119770-90380	BOLT	2	2	2	2	2	2		
12	2	119770-90390	NUT	2	2	2	2	2	2		
13	2	119770-90611	STUD	2	2	2	2	2	2		
14	1	119770-01200	SENSOR	1	1	1	1	1	1		
15	1	119770-91020	GASKET	1	1	1	1	1	1		
16	1	119773-34810	BOLT, PIPE JOINT	1	1	1	1	1	1		
17	1	22117-120000	WASHER, 12	1	1	1	1	1	1		
18	1	23414-120016	GASKET, 12X1.0	1	1	1	1	1	1		
19	1	26106-080142	BOLT, M8X 14 PLATED	1	1	1	1	1	1		
20	1	26156-120202	BOLT, M12X 20 PLATED	1	1	1	1	1	1		
21	1	22190-120006	WASHER, SEAL 12	1	1	1	1	1	1		
22	1	119773-34501	BOLT	1	1	1					
23	1	119773-34600	GUIDE, DIPSTICK	1	1	1	1	1	1		
24	1	119773-34621	DIPSTICK, OIL	1	1	1	1	1	1		
25	1	119773-34770	JOINT	1	1	1	1	1	1		
26	1	24341-000100	O-RING, 1AS10.0	1	1	1	1	1	1		
27	1	26716-080002	NUT, M8	1	1	1					
28	1	119773-34400	BOLT, M10X145				1	1	1		
29	1	119773-34821	GUIDE, DIPSTICK	1	1	1	1	1	1		
30	1	119773-34950	DIPSTICK, OIL	1	1	1	1	1	1		

N:Old $\overset{\text{Yes}}{\underset{\text{No}}{\leftrightarrow}}$ New, Q:Old $\overset{\text{No}}{\underset{\text{Yes}}{\leftrightarrow}}$ New, R:Old $\overset{\text{Yes}}{\underset{\text{Yes}}{\leftrightarrow}}$ New, S:Old $\overset{\text{No}}{\underset{\text{No}}{\leftrightarrow}}$ New, W:Add, Z:Discontinued, F:Interchangeable by set, K:Q'ty Change

Copyright (C) YANMAR CO., LTD. All RightsReserved.

Fig.7. LABEL

Y00R5420

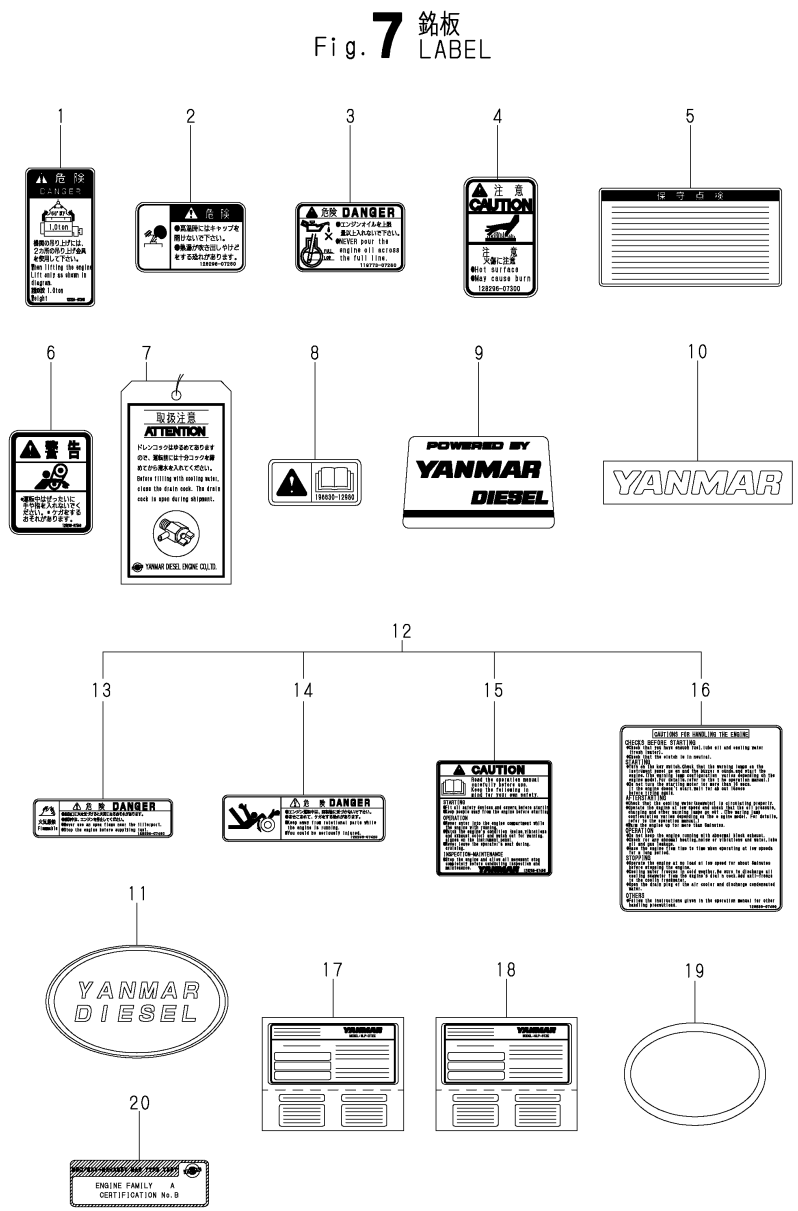

(A)=6LP(A)-DTE(P (D)=6LP(A)-STE(P
(B)=6LP(A-DTZE(P (E)=6LP(A-STZE(P
(C)=6LP(A-DTZEP1 (F)=6LP(A-STZEP1

No.	Lev.	Parts No.	Description	Q'ty (A)	(B)	(C)	(D)	(E)	(F)	I	R
1	1	120324-07240	LABEL, DANGER	1	1	1	1	1	1		
2	1	128296-07260	LABEL, DANGER	1	1	1	1	1	1		
3	1	119773-07280	LABEL, DANGER	1	1	1	1	1	1		
4	1	128296-07300	LABEL, DANGER	1	1	1	1	1	1		
5	1	119773-07350	LABEL	1	1	1	1	1	1		
6	1	128296-07360	LABEL, CAUTION	1	1	1	1	1	1		
7	1	123682-07851	LABEL, CAUTION	1	1	1	1	1	1		
8	1	196630-12980	LABEL, CAUTION	1	1	1	1				
9	1	119778-07500	LABEL, YANMAR		1	1		1	1		
10	1	119773-07251	LABEL, YANMAR	1	1	1					
11	1	119775-07251	LABEL, YANMAR				1	1	1		
12	1	128296-07190	LABEL,LOOSE PARTS	1	1	1	1	1	1		
13	2	128296-07400	LABEL, DANGER	2	2	2	2	2	2		
14	2	128296-07420	LABEL, DANGER	1	1	1	1	1	1		
15	2	128296-07450	LABEL, DANGER	1	1	1	1	1	1		
16	2	128296-07460	LABEL, DANGER	1	1	1	1	1	1		
17	1	119778-07400	LABEL, REGISTRATION		1	1					
17A	1	119778-07420	LABEL, REGISTRATION		1	1					
17B	1	119778-07450	LABEL, REGISTRATION	1	1	1					
18	1	119779-07400	LABEL, REGISTRATION					1	1		
18A	1	119779-07420	LABEL, REGISTRATION					1	1		
18B	1	119779-07450	LABEL, REGISTRATION				1	1	1		
19	1	119775-07280	LABEL				1	1	1		
20	1	119773-07510	LABEL, BSO	1	1	1					
20A	1	119775-07510	LABEL, BSO				1	1	1		

N:Old $\xleftarrow[\text{No}]{\text{Yes}}$ New, Q:Old $\xleftarrow[\text{Yes}]{\text{No}}$ New, R:Old $\xleftarrow[\text{Yes}]{\text{Yes}}$ New, S:Old $\xleftarrow[\text{No}]{\text{No}}$ New, W:Add, Z:Discontinued, F:Interchangeable by set, K:Q'ty Change

Copyright (C) YANMAR CO., LTD. All RightsReserved.

Fig.8. BREATHER

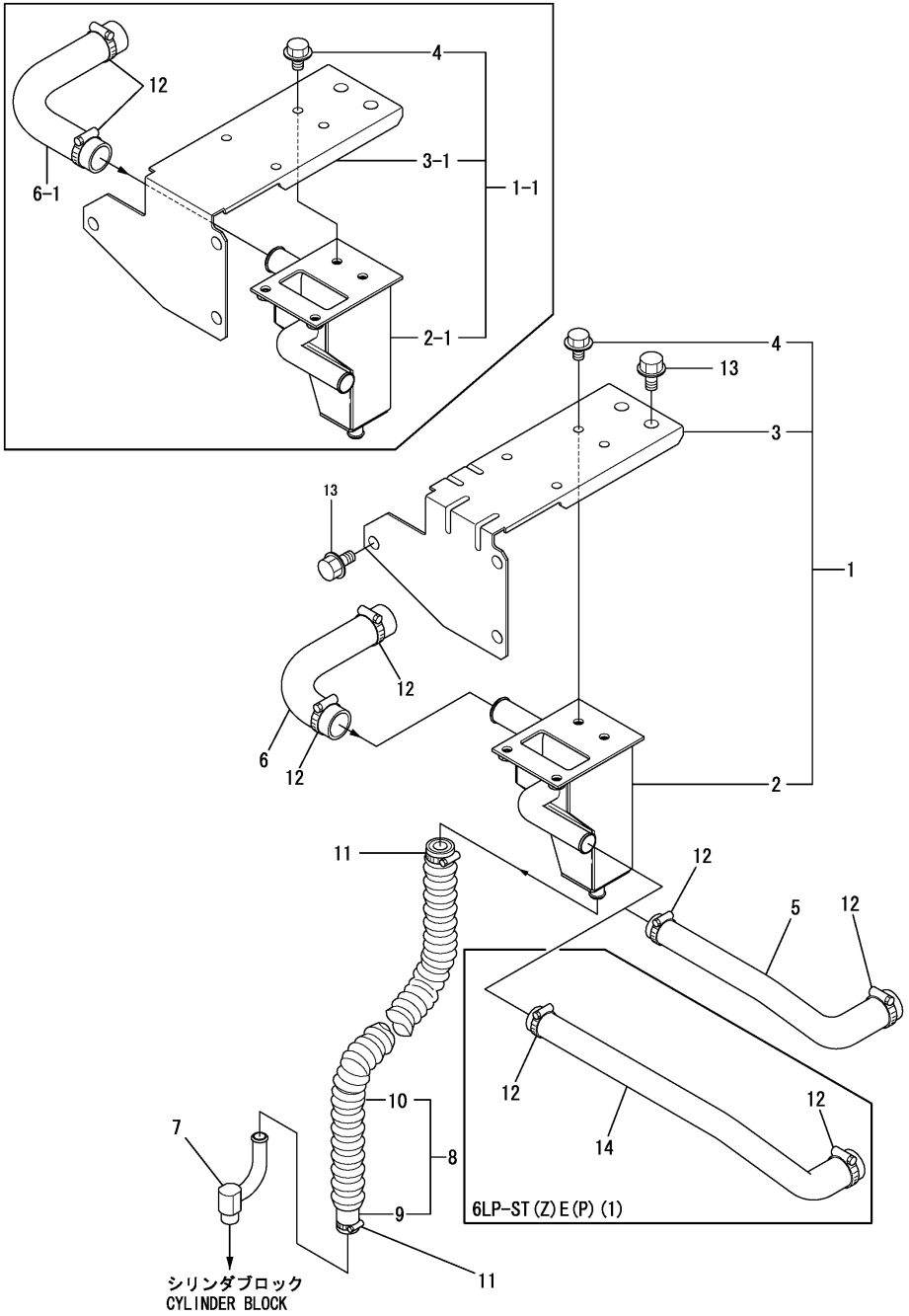

(A)=6LP(A)-DTE(P (D)=6LP(A)-STE(P
(B)=6LP(A-DTZE(P (E)=6LP(A-STZE(P
(C)=6LP(A-DTZEP1 (F)=6LP(A-STZEP1

No.	Lev.	Parts No.	Description	Q'ty (A)	(B)	(C)	(D)	(E)	(F)	I	R
1	1	119773-03011	BREATHER ASSY	1	1	1	1	1	1		
1-1	1	119773-03012	BREATHER ASSY	1	1	1	1	1	1	S	
	(A=EZZZZZ)	(B=EZZZZZ)	(C=EZZZZZ) (D=EZZZZZ)	(E=EZZZZZ)				(F=EZZZZZ)			
2	2	119773-03021	BODY, BREATHER	1	1	1	1	1	1		
2-1	2	119773-03022	BODY, BREATHER	1	1	1	1	1	1	S	
	(A=EZZZZZ)	(B=EZZZZZ)	(C=EZZZZZ) (D=EZZZZZ)	(E=EZZZZZ)				(F=EZZZZZ)			
3	2	119773-03031	COVER	1	1	1	1	1	1		
3-1	2	119773-03032	COVER, BREATHER	1	1	1	1	1	1	S	
	(A=EZZZZZ)	(B=EZZZZZ)	(C=EZZZZZ) (D=EZZZZZ)	(E=EZZZZZ)				(F=EZZZZZ)			
4	2	26106-060122	BOLT, M6X 12 PLATED	4	4	4	4	4	4		
5	1	119773-03150	HOSE, BREATHER	1	1	1					
6	1	119773-03190	HOSE, BREATHER	1	1	1	1	1	1		
6-1	1	119773-03191	HOSE,BREATHER OUT	1	1	1	1	1	1	S	
	(A=EZZZZZ)	(B=EZZZZZ)	(C=EZZZZZ) (D=EZZZZZ)	(E=EZZZZZ)				(F=EZZZZZ)			
7	1	119773-03200	TUBE	1	1	1	1	1	1		
8	1	119773-03301	HOSE	1	1	1	1	1	1		
9	2	119773-03251	HOSE	1	1	1	1	1	1		
10	2	119773-03271	TUBE, CORRUGATED	1	1	1	1	1	1		
11	1	23000-016000	CLAMP, 16	2	2	2	2	2	2		
12	1	23000-028000	CLAMP, 28	4	4	4	4	4	4		
13	1	26106-080142	BOLT, M8X 14 PLATED	5	5	5	5	5	5		
14	1	119775-03150	HOSE, RUBBER				1	1	1		

N:Old $\overset{\text{Yes}}{\underset{\text{No}}{\leftrightarrow}}$ New, Q:Old $\overset{\text{No}}{\underset{\text{Yes}}{\leftrightarrow}}$ New, R:Old $\overset{\text{Yes}}{\underset{\text{Yes}}{\leftrightarrow}}$ New, S:Old $\overset{\text{No}}{\underset{\text{No}}{\leftrightarrow}}$ New, W:Add, Z:Discontinued, F:Interchangeable by set, K:Q'ty Change

Copyright (C) YANMAR CO., LTD. All RightsReserved.

Fig.9. TURBINE

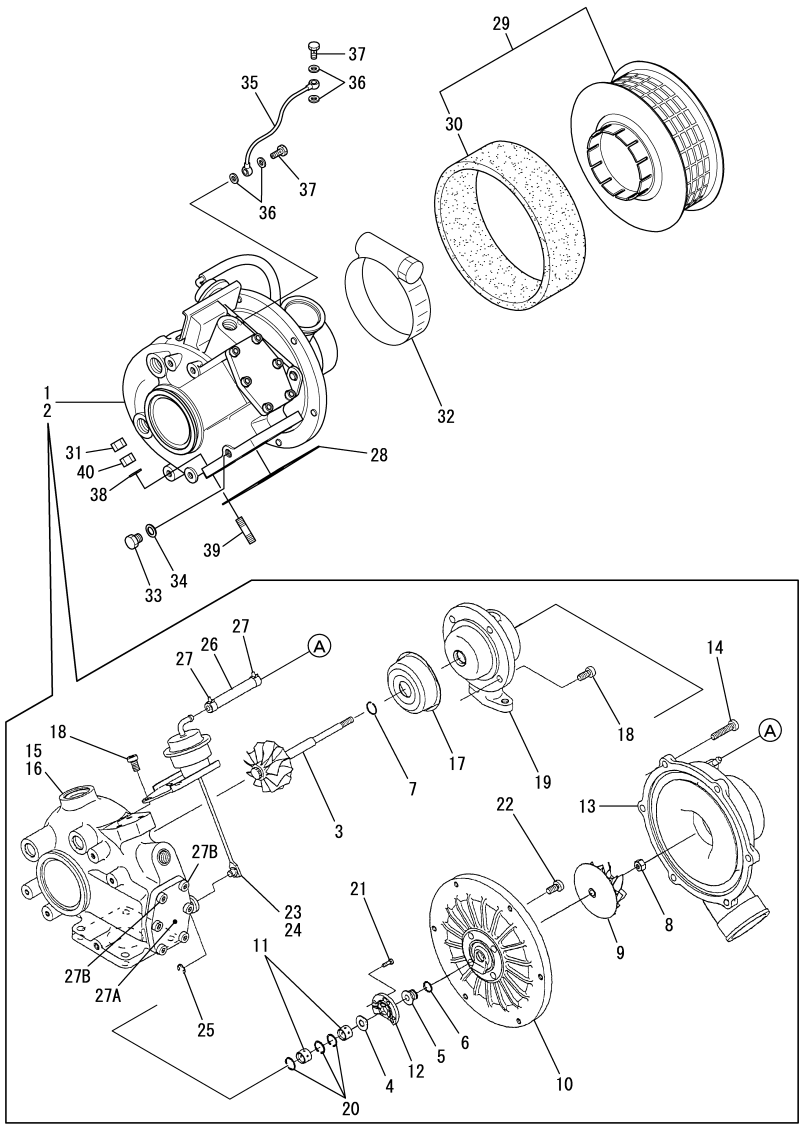

(A)=6LP(A)-DTE(P (D)=6LP(A)-STE(P
(B)=6LP(A-DTZE(P (E)=6LP(A-STZE(P
(C)=6LP(A-DTZEP1 (F)=6LP(A-STZEP1

No.	Lev.	Parts No.	Description	Q'ty (A)	(B)	(C)	(D)	(E)	(F)	I	R
1	1	119773-18010	TURBINE ASSY	1	1	1					
2	1	119775-18010	TURBINE ASSY				1	1	1		
3	2	XNH361206	TURBIN SHAFT ASSY	1	1	1	1	1	1		
4	2	XNH361400	BUSH	1	1	1	1	1	1		
5	2	XNH361401	COVER	1	1	1	1	1	1		
6	2	XNH261605	RING, SEAL	1	1	1	1	1	1		
7	2	XNH261604	RING, SEAL	1	1	1	1	1	1		
8	2	XNN171110	NUT	1	1	1	1	1	1		
9	2	XNH364606	IMPELLA (COMPRESSER	1	1	1	1	1	1		
10	2	XNH362112	SEAL PLATE	1	1	1	1	1	1		
11	2	XNH363001	METAL, FLOATING	2	2	2	2	2	2		
12	2	XNH363051	THRUST BEARING	1	1	1	1	1	1		
13	2	XNH364405	HOUSING(COMPRESSER	1	1	1	1	1	1		
14	2	XNH362804	FLAT BOLT	6	6	6	6	6	6		
15	2	XNH369807	HOUSING ASSY,TURBINE	1	1	1					1
15A	3	XNH365419	HOUSING,TURBINE(UNIT	1	1	1					
16	2	XNH369101	HOUSING ASSY,TURBINE				1	1	1		2
16A	3	XNH365418	HOUSING,TURBINE(UNIT				1	1	1		
17	2	XNH365303	PLATE	1	1	1	1	1	1		
18	2	XNH362809	FLAT BOLT	4	4	4	4	4	4		
19	2	XNH362709	HOUSING, BEARING	1	1	1	1	1	1		
20	2	XNH362810	RETAINING RING	3	3	3	3	3	3		
21	2	XNH362802	SCREW	3	3	3	3	3	3		
22	2	XNH362803	SCREW	4	4	4	4	4	4		
23	2	XNH961180	ACTUATER(WESTGATE	1	1	1					
24	2	XNH961260	ACTUATOR				1	1	1		
25	2	XJD532012	CIRCLIP	1	1	1	1	1	1		
26	2	XNH978931	BOOST HOSE	1	1	1	1	1	1		
27	2	XNN976562	CLAMP	2	2	2	2	2	2		
27A	2	XNH365311	COVER	1	1	1	1	1	1		
27B	2	XNH362809	FLAT BOLT	6	6	6	6	6	6		
28	1	119773-18250	GASKET	1	1	1	1	1	1		
29	1	119773-18850	SILENCER ASSY	1	1	1	1	1	1		
30	2	119593-18880	FILTER, 65MM	1	1	1	1	1	1		
31	1	26703-100002	NUT, M10	4	4	4	4	4	4		
32	1	123658-18910	CLIP, HOSE	1	1	1	1	1	1		
33	1	23893-010002	PLUG, G1/8	1	1	1	1	1	1		
34	1	23414-100000	GASKET, 10X1.0	1	1	1	1	1	1		
35	1	119773-18700	PIPE, AIR VENT	1	1	1	1	1	1		
36	1	23414-080012	GASKET, 8X1.0	4	4	4	4	4	4		
37	1	23857-030000	BOLT, JOINT 3	2	2	2	2	2	2		
38	1	22117-100000	WASHER, 10	1	1	1	1	1	1		
39	1	26213-100252	STUD, M10X 25	1	1	1	1	1	1		
40	1	26706-100002	NUT, M10	1	1	1	1	1	1		

Remarks
(1)Assmbly parts of Turbine housing assy are link board, valve and waist gate valve case.
It isn't sell the unit.
(2)Assmbly parts of Turbine housing assy are link board and valve.
It isn't sell the unit.

N:Old ←Yes/No→ New, Q:Old ←No/Yes→ New, R:Old ←Yes/Yes→ New, S:Old ←No/No→ New, W:Add, Z:Discontinued, F:Interchangeable by set, K:Q'ty Change

Copyright (C) YANMAR CO., LTD. All RightsReserved.

Fig.10. EXHAUST BEND

P/C NEWS No.:Y00R5420-9
PUBLISHED :2008/3

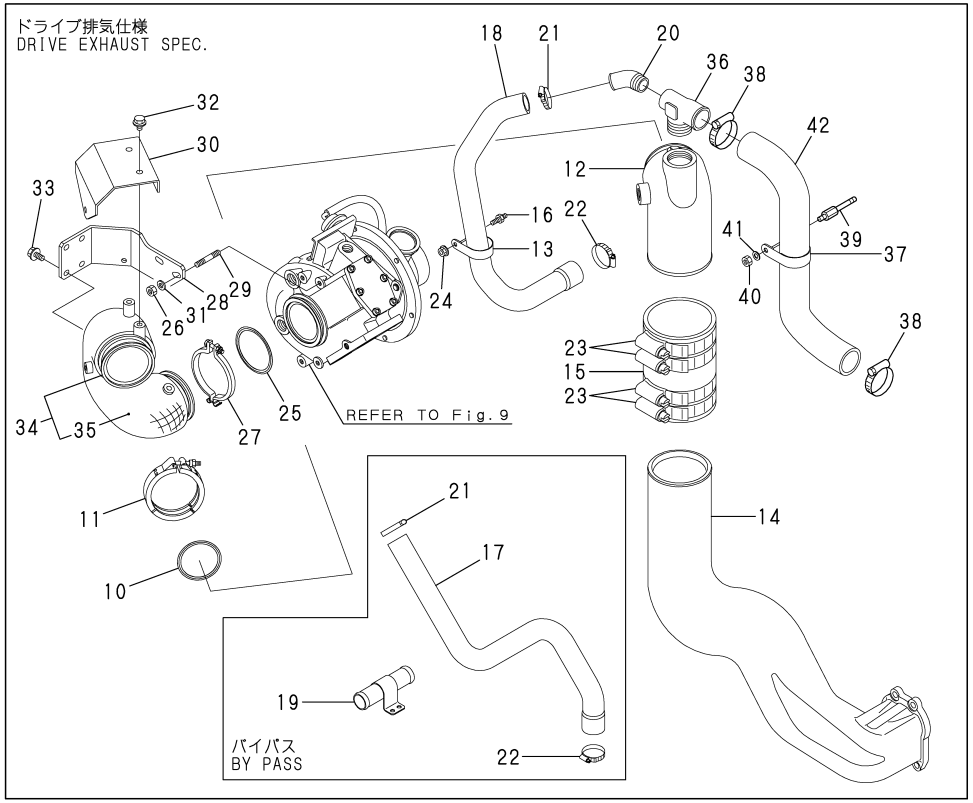

(A)=6LP(A)-DTE(P (D)=6LP(A)-STE(P
(B)=6LP(A-DTZE(P (E)=6LP(A-STZE(P
(C)=6LP(A-DTZEP1 (F)=6LP(A-STZEP1

No.	Lev.	Parts No.	Description	Q'ty (A)	(B)	(C)	(D)	(E)	(F)	I	R
1	1	119773-13250	GASKET	1	1	1	1	1	1		
2	1	119773-13300	CLAMP	1	1	1	1	1	1		
3	1	119778-13300	BEND ASSY	1	1	1	1	1	1		
4	2	119778-13310	MAT, WOOL	1	1	1	1	1	1		
6	1	119778-13330	COVER	1	1	1	1	1	1		
7	1	119778-13370	BRACKET, BEND	1	1	1	1	1	1		
8	1	26106-080122	BOLT, M8X 12 PLATED	4	4	4	4	4	4		
9	1	26106-080162	BOLT, M8X 16 PLATED	4	4	4	4	4	4		
10	1	119773-13250	GASKET	1	1	1	1	1	1		
11	1	119773-13300	CLAMP	1	1	1	1	1	1		
12	1	119773-13500	ELBOW	1	1	1	1	1	1		
13	1	127610-03270	RETAINER		1	1		1	1		
14	1	119778-13640	PIPE, EXHAUST		1	1		1	1		
15	1	119175-13800	JOINT		1	1		1	1		
16	1	114973-13950	BOLT		1	1		1	1		
17	1	119778-49070	HOSE		1	1		1	1		
18	1	119778-49080	HOSE		1	1		1	1		
19	1	119778-49200	JOINT		1	1		1	1		
20	1	119175-49550	JOINT		2	2		2	2		
21	1	23000-035000	CLAMP, 35		2	2		2	2		
21-1	1	119172-48350	CLIP, HOSE 35		2	2		2	2	N	
		(B=*2002.03)	(C=*2002.03)		(E=*2002.03)			(F=*2002.03)			
22	1	23000-041000	CLAMP, 41		2	2		2	2		
22-1	1	119172-48410	CLIP, HOSE 41		2	2		2	2	N	
		(B=*2002.03)	(C=*2002.03)		(E=*2002.03)			(F=*2002.03)			
23	1	23000-127000	CLAMP, 127		4	4		4	4		
23-1	1	119172-48010	CLIP, HOSE 127		4	4		4	4	N	
		(B=*2002.03)	(C=*2002.03)		(E=*2002.03)			(F=*2002.03)			
24	1	26306-080002	NUT, M8		1	1		1	1		
25	1	119773-13250	GASKET		1	1		1	1		
26	1	26306-080002	NUT, M8		2	2		2	2		
27	1	119773-13300	CLAMP		1	1		1	1		
28	1	119778-13550	BRACKET, BEND		1	1		1	1		
29	1	128170-13600	STUD, M8X31		2	2		2	2		
30	1	119175-13700	COVER		1	1		1	1		
31	1	22137-080000	WASHER, 8		1	1		1	1		
32	1	26106-080122	BOLT, M8X 12 PLATED		3	3		3	3		
33	1	26106-080162	BOLT, M8X 16 PLATED		4	4		4	4		
34	1	119175-13301	BEND ASSY		1	1		1	1		
35	2	119175-13320	INSULATOR		1	1		1	1		
36	1	119778-48620	JOINT	1	1	1	1	1	1		
36-1	1	119779-48620	BEND	1	1	1	1	1	1	R	
	(A=*2002.01)	(B=*2002.01)	(C=*2002.01)	(D=*2002.01)	(E=*2002.01)			(F=*2002.01)			
37	1	119593-49080	BAND		1	1		1	1		
38	1	23000-054000	CLAMP, 54		2	2		2	2		
39	1	119778-49800	BOLT		1	1		1	1		
40	1	26716-080002	NUT, M8		1	1		1	1		
41	1	22117-080000	WASHER, 8		1	1		1	1		
42	1	119778-49040	HOSE, MIXING		1	1		1	1		
42-1	1	119779-49040	HOSE, MIXING		1	1		1	1	R	
		(B=*2001.04)	(C=*2001.04)		(E=*2001.04)			(F=*2001.04)			

N:Old $\overset{\text{Yes}}{\underset{\text{No}}{\leftrightarrow}}$ New, Q:Old $\overset{\text{No}}{\underset{\text{Yes}}{\leftrightarrow}}$ New, R:Old $\overset{\text{Yes}}{\underset{\text{Yes}}{\leftrightarrow}}$ New, S:Old $\overset{\text{No}}{\underset{\text{No}}{\leftrightarrow}}$ New, W:Add, Z:Discontinued, F:Interchangeable by set, K:Q'ty Change

Copyright (C) YANMAR CO., LTD. All RightsReserved.

Fig.11. AIR COOLER

Y00R5420

Fig. 11 インタークーラ AIR COOLER

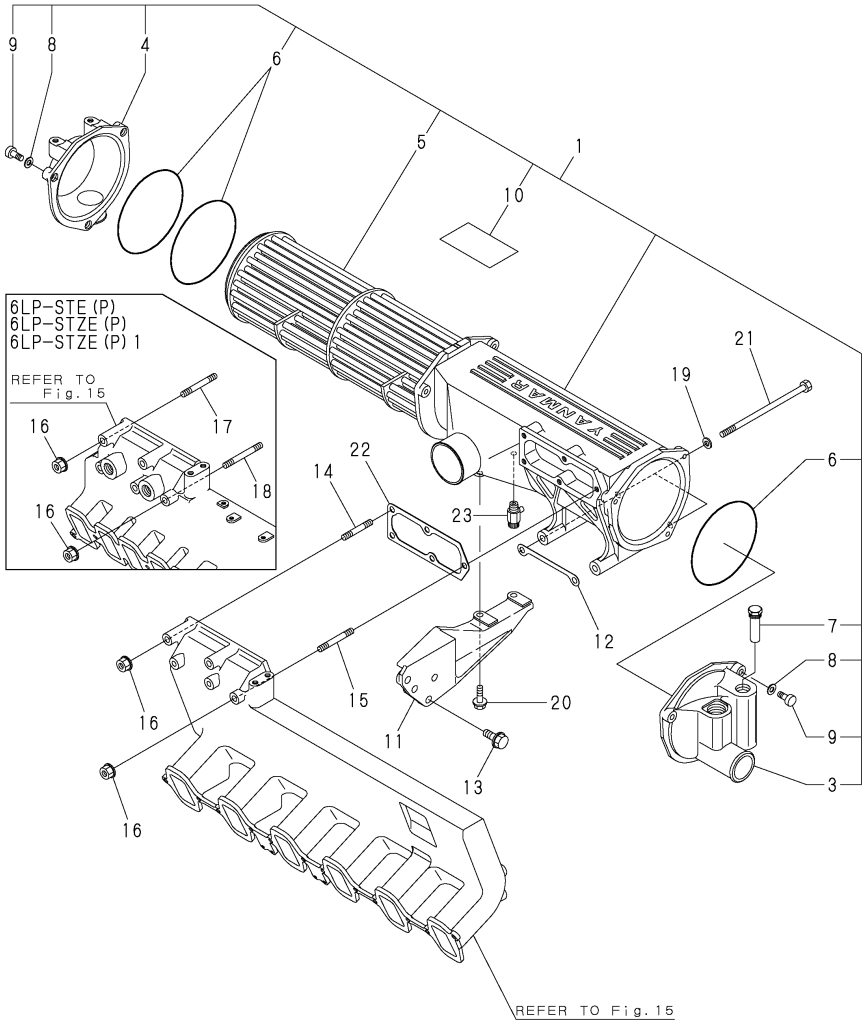

(A)=6LP(A)-DTE(P (D)=6LP(A)-STE(P
(B)=6LP(A-DTZE(P (E)=6LP(A-STZE(P
(C)=6LP(A-DTZEP1 (F)=6LP(A-STZEP1

No.	Lev.	Parts No.	Description	Q'ty (A)	(B)	(C)	(D)	(E)	(F)	I	R
1	1	119773-18100	COOLER ASSY, INTER	1	1	1	1	1	1		
3	2	119773-18340	BOX, WATER	1	1	1	1	1	1		
4	2	119773-18330	BOX, WATER	1	1	1	1	1	1		
5	2	119773-18320	TUBE	1	1	1	1	1	1		
6	2	119773-18350	O-RING	3	3	3	3	3	3		
7	2	119574-18790	ZINC, ANTI-CORROSIVE	1	1	1	1	1	1		
8	2	X211810030	WASHER	6	6	6	6	6	6		
9	2	X214320104	SCREW	6	6	6	6	6	6		
10	2	119773-18360	LABEL	1	1	1	1	1	1		
11	1	119773-18160	BRACKET	1	1	1	1	1	1		
12	1	119773-18181	GASKET	1	1	1	1	1	1		
13	1	26136-100252	BOLT, M10X 25 PLATED	2	2	2	2	2	2		
14	1	26226-080602	STUD, M8X 60	2	2	2					
15	1	26226-080652	STUD, M8X 65	3	3	3					
16	1	26306-080002	NUT, M8	5	5	5	5	5	5		
17	1	26226-080652	STUD, M8X 65				2	2	2		
18	1	26226-080752	STUD, M8X 75				3	3	3		
19	1	22117-080000	WASHER, 8	2	2	2	2	2	2		
20	1	26106-080252	BOLT, M8X 25 PLATED	2	2	2	2	2	2		
21	1	26116-081652	BOLT, M8X165 PLATED	2	2	2	2	2	2		
22	1	119773-18121	GASKET	1	1	1	1	1	1		
23	1	119620-49290	COCK ASSY, 1/4	1	1	1	1	1	1		

N:Old $\frac{\text{Yes}}{\text{No}}$ New, Q:Old $\frac{\text{No}}{\text{Yes}}$ New, R:Old $\frac{\text{Yes}}{\text{Yes}}$ New, S:Old $\frac{\text{No}}{\text{No}}$ New, W:Add, Z:Discontinued, F:Interchangeable by set, K:Q'ty Change

Copyright (C) YANMAR CO., LTD. All RightsReserved.

Fig.12. AIR DUCT

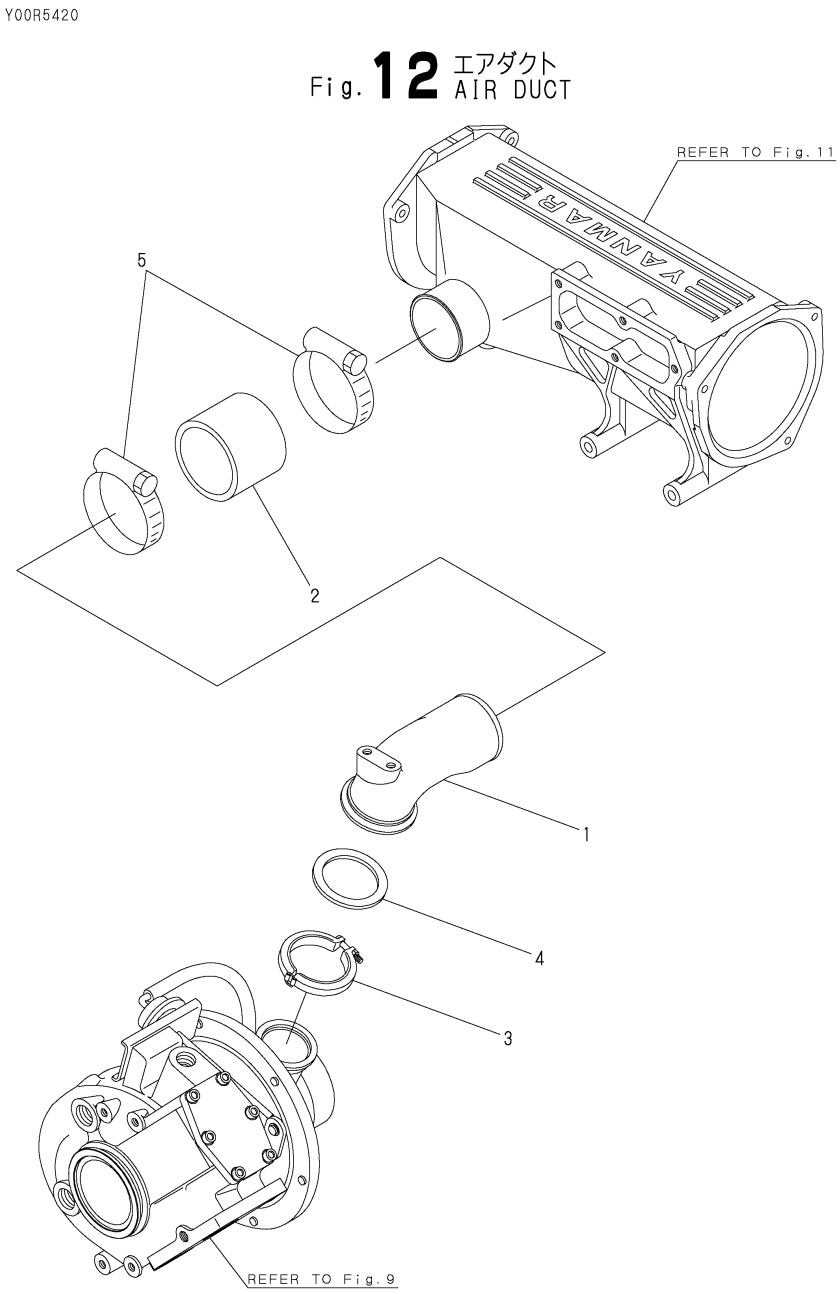

(A)=6LP(A)-DTE(P (D)=6LP(A)-STE(P
(B)=6LP(A-DTZE(P (E)=6LP(A-STZE(P
(C)=6LP(A-DTZEP1 (F)=6LP(A-STZEP1

No.	Lev.	Parts No.	Description	Q'ty (A)	(B)	(C)	(D)	(E)	(F)	I	R
1	1	119773-18210	DUCT, AIR	1	1	1	1	1	1		
2	1	119574-18250	HOSE, AIR DUCT	1	1	1	1	1	1		
3	1	119574-18700	BAND	1	1	1	1	1	1		
4	1	119593-18800	GASKET	1	1	1	1	1	1		
5	1	127687-18910	CLIP, HOSE	2	2	2	2	2	2		

N:Old $\xleftrightarrow[\text{No}]{\text{Yes}}$ New, Q:Old $\xleftrightarrow[\text{Yes}]{\text{No}}$ New, R:Old $\xleftrightarrow[\text{Yes}]{\text{Yes}}$ New, S:Old $\xleftrightarrow[\text{No}]{\text{No}}$ New, W:Add, Z:Discontinued, F:Interchangeable by set, K:Q'ty Change

Copyright (C) YANMAR CO., LTD. All RightsReserved.

Fig.13. BOOST CONTROL

(A)=6LP(A)-DTE(P
(B)=6LP(A-DTZE(P
(C)=6LP(A-DTZEP1
(D)=6LP(A)-STE(P
(E)=6LP(A-STZE(P
(F)=6LP(A-STZEP1

Y00R5420

Fig. 13 ブーコン BOOST CONTROL

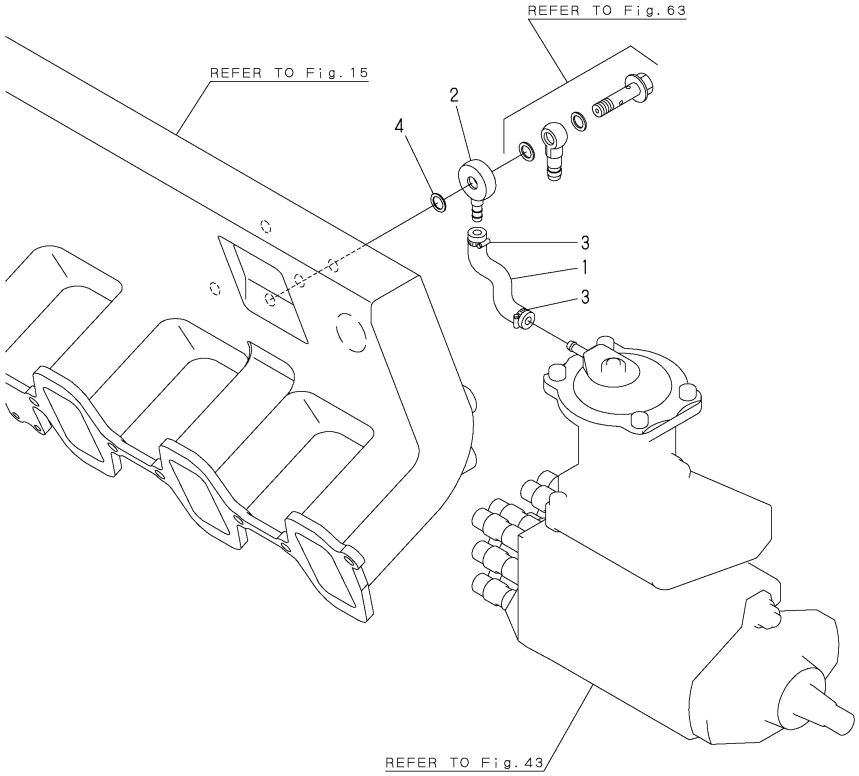

No.	Lev.	Parts No.	Description	Q'ty (A)	(B)	(C)	(D)	(E)	(F)	I	R
1	1	127487-18970	JOINT	1	1	1	1	1	1		
2	1	120130-59080	JOINT	1	1	1	1	1	1		
3	1	23000-013000	CLAMP, 13	2	2	2	2	2	2		
4	1	23414-080000	GASKET, 8X1.0	1	1	1	1	1	1		

N:Old $\xleftrightarrow[\text{No}]{\text{Yes}}$ New, Q:Old $\xleftrightarrow[\text{Yes}]{\text{No}}$ New, R:Old $\xleftrightarrow[\text{Yes}]{\text{Yes}}$ New, S:Old $\xleftrightarrow[\text{No}]{\text{No}}$ New, W:Add, Z:Discontinued, F:Interchangeable by set, K:Q'ty Change

Copyright (C) YANMAR CO., LTD. All RightsReserved.

Fig.14. EXHAUST MANIFOLD

(A)=6LP(A)-DTE(P (D)=6LP(A)-STE(P
(B)=6LP(A-DTZE(P (E)=6LP(A-STZE(P
(C)=6LP(A-DTZEP1 (F)=6LP(A-STZEP1

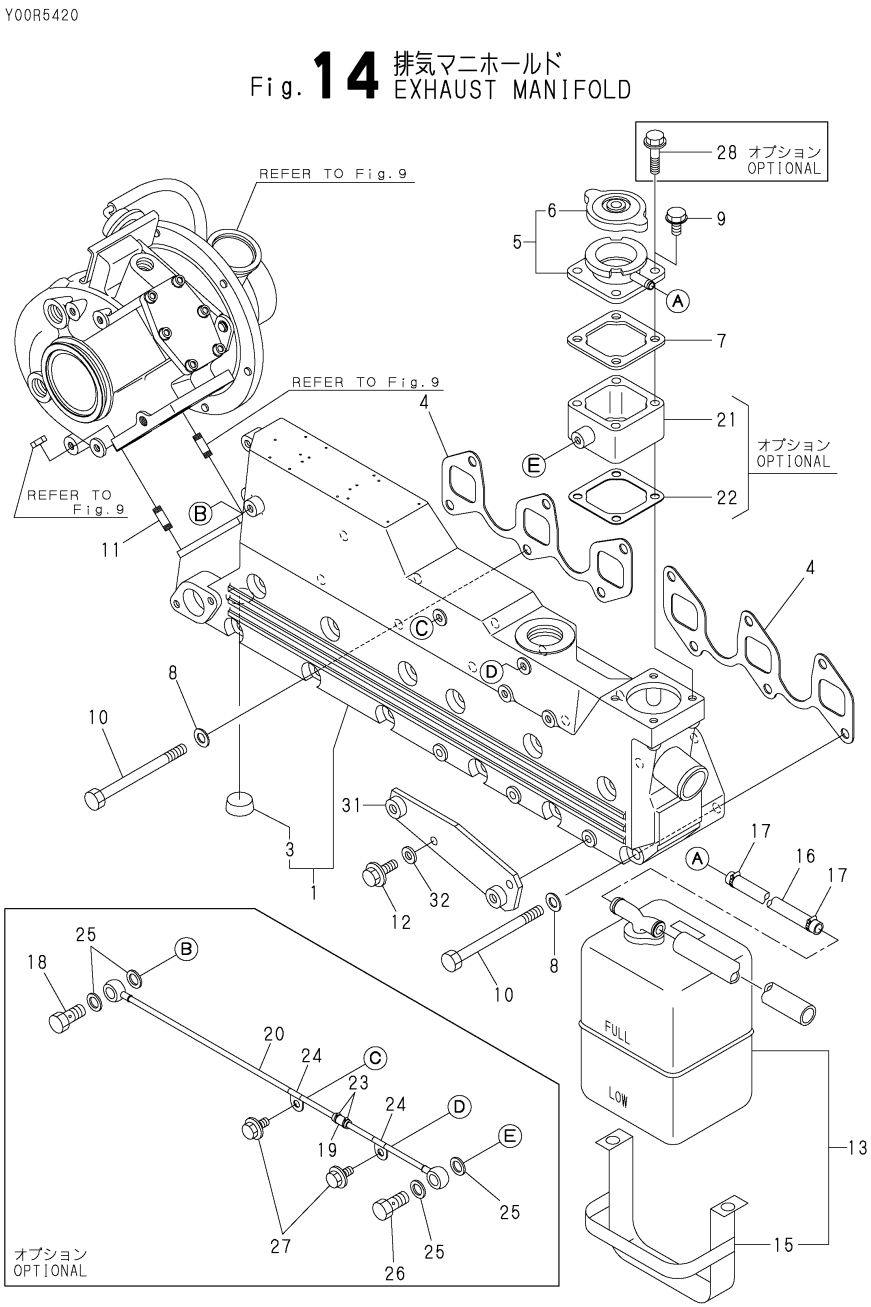

No.	Lev.	Parts No.	Description	Q'ty (A)	(B)	(C)	(D)	(E)	(F)	I	R
1	1	119773-13100	MANIFOLD ASSY	1	1	1	1	1	1		
3	2	119773-13160	PLUG, 28	4	4	4	4	4	4		
4	1	119773-13200	GASKET	2	2	2	2	2	2		
5	1	129171-44600	FILLER ASSY	1	1	1	1	1	1		
6	2	129107-44590	CAP, RADIATOR	1	1	1	1	1	1		
7	1	120445-44640	GASKET	1	1	1	1	1	1		
8	1	22117-100000	WASHER, 10	12	12	12	12	12	12		
9	1	26106-080162	BOLT, M8X 16 PLATED	4	4	4	4	4	4		
10	1	119773-13010	BOLT, M10X130	12	12	12	12	12	12		
11	1	26223-100252	STUD, M10X 25	3	3	3	3	3	3		
12	1	26106-080222	BOLT, M8X 22 PLATED		2	2		2	2		
13	1	720445-44201	TANK ASSY, SUB 3.4L	1	1	1	1	1	1		
15	2	119593-44560	BRACKET	1	1	1	1	1	1		
16	1	124790-44560	PIPE, WATER L=1000	1	1	1	1	1	1		
17	1	23010-013000	CLAMP 13	2	2	2	2	2	2		
18	1	127616-11960	BOLT	1			1				
19	1	119593-18480	JOINT, RUBBER	1			1				
20	1	119773-44500	TUBE	2			2				
21	1	119595-44600	SPACER	1			1				
22	1	120445-44640	GASKET	1			1				
23	1	23000-013000	CLAMP, 13	2			2				
24	1	23297-060081	CLAMP, A6X 8	2			2				
25	1	23414-080012	GASKET, 8X1.0	4			4				
26	1	23857-030000	BOLT, JOINT 3	1			1				
27	1	26106-080122	BOLT, M8X 12 PLATED	2			2				
28	1	26106-080602	BOLT, M8X 60 PLATED	4			4				
31	1	119778-67200	BRACKET		1	1		1	1		
32	1	22117-080000	WASHER, 8		2	2		2	2		

N:Old ⇄(Yes/No) New, Q:Old ⇄(No/Yes) New, R:Old ⇄(Yes/Yes) New, S:Old ⇄(No/No) New, W:Add, Z:Discontinued, F:Interchangeable by set, K:Q'ty Change

Copyright (C) YANMAR CO., LTD. All RightsReserved.

Fig.15. SUCTION MANIFOLD

Y00R5420

Fig. 15 吸気マニホールド SUCTION MANIFOLD

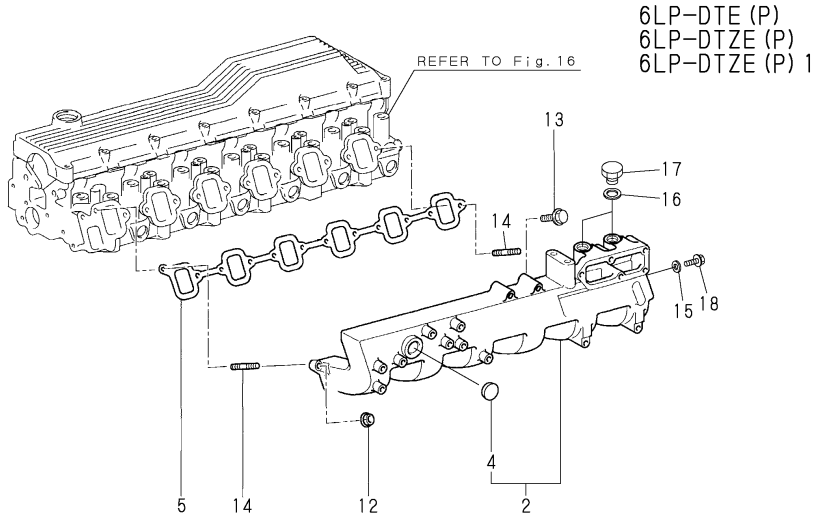

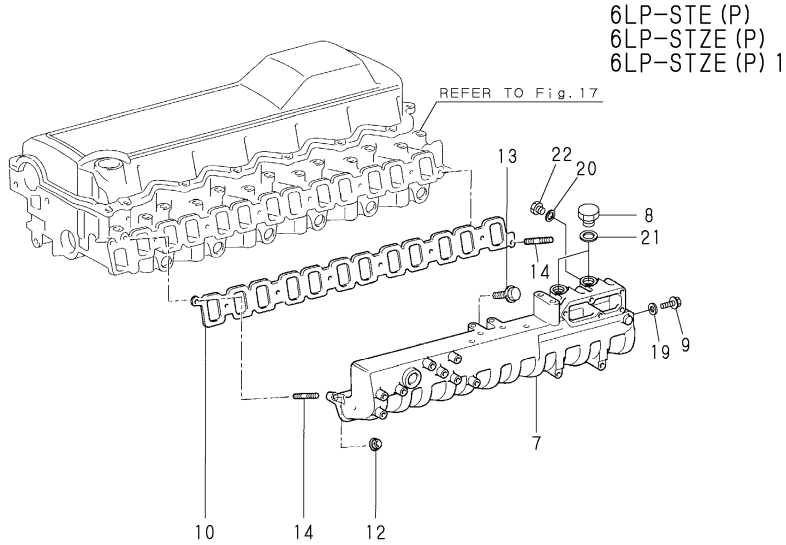

(A)=6LP(A)-DTE(P (D)=6LP(A)-STE(P
(B)=6LP(A-DTZE(P (E)=6LP(A-STZE(P
(C)=6LP(A-DTZEP1 (F)=6LP(A-STZEP1

No.	Lev.	Parts No.	Description	Q'ty (A)	(B)	(C)	(D)	(E)	(F)	I	R
2	2	119773-12100	MANIFOLD ASSY	1	1	1					
4	3	27241-250000	PLUG, 25	1	1	1					
5	2	119773-12150	GASKET, MANIFOLD	1	1	1					
7	2	119775-12101	MANIFOLD ASSY				1	1	1		
8	1	23887-200002	PLUG, 20				2	2	2		
9	1	26106-080162	BOLT, M8X 16 PLATED				1	1	1		
10	2	119775-12150	GASKET, MANIFOLD				1	1	1		
12	2	119770-90630	NUT	2	2	2	2	2	2		
13	2	119770-90740	BOLT	10	10	10	10	10	10		
14	2	119770-90860	STUD	2	2	2	2	2	2		
15	1	23414-080012	GASKET, 8X1.0	1	1	1					
16	1	23414-200000	GASKET, 20X1.0	2	2	2					
17	1	23887-200002	PLUG, 20	2	2	2					
18	1	26106-080162	BOLT, M8X 16 PLATED	1	1	1					
19	1	23414-080012	GASKET, 8X1.0				1	1	1		
20	1	23414-180000	GASKET, 18X1.0				2	2	2		
21	1	23414-200000	GASKET, 20X1.0				2	2	2		
22	1	23887-180002	PLUG, 18				2	2	2		

N:Old $\xleftarrow[\text{No}]{\text{Yes}}$ New, Q:Old $\xleftarrow[\text{Yes}]{\text{No}}$ New, R:Old $\xleftarrow[\text{Yes}]{\text{Yes}}$ New, S:Old $\xleftarrow[\text{No}]{\text{No}}$ New, W:Add, Z:Discontinued, F:Interchangeable by set, K:Q'ty Change

Copyright (C) YANMAR CO., LTD. All RightsReserved.

Fig.16. CYLINDER HEAD(6LP-DT(Z)E(P)1)

P/C NEWS No:Y00R5420-3
PUBLISHED:2005/3

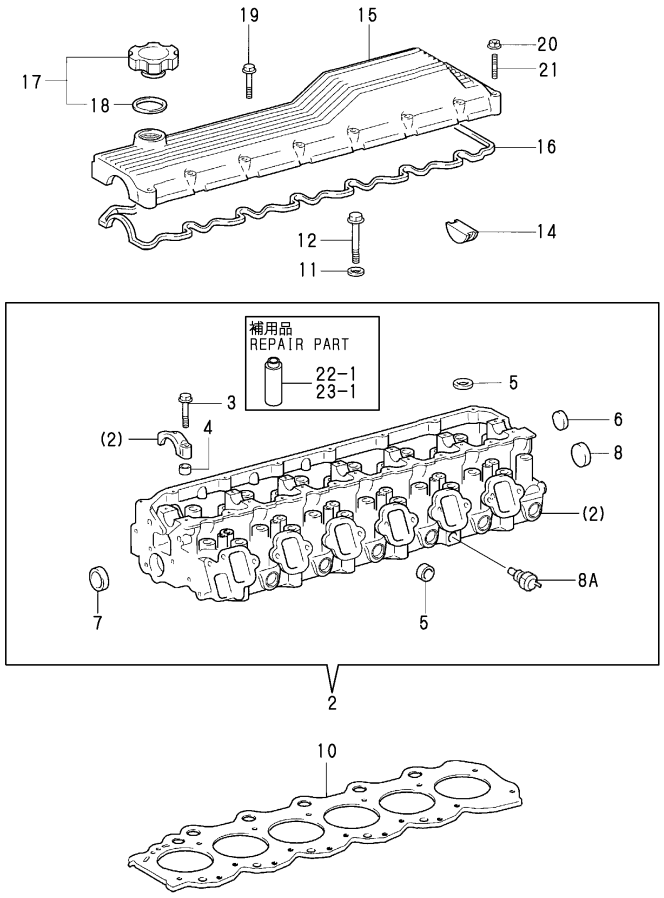

(A)=6LP(A)-DTE(P (D)=6LP(A)-STE(P
(B)=6LP(A-DTZE(P (E)=6LP(A-STZE(P
(C)=6LP(A-DTZEP1 (F)=6LP(A-STZEP1

No.	Lev.	Parts No.	Description	Q'ty (A)	(B)	(C)	(D)	(E)	(F)	I	R
2	2	119770-00010	HEAD ASSY, CYLINDER	1	1	1					
3	3	119770-90010	BOLT	14	14	14					
4	3	119770-90020	PIN	14	14	14					
5	3	119770-90030	PLUG, TIGHT	10	10	10					
6	3	119770-90040	PLUG, TIGHT	1	1	1					
7	3	119770-90050	PLUG, TIGHT	1	1	1					
8	3	119770-90060	PLUG, TIGHT	1	1	1					
8A	2	119770-01230	GAUGE	1	1	1				W	
	(A=FROM 1ST)	(B=FROM 1ST)	(C=FROM 1ST)								
10	2	119770-00020	GASKET, HEAD	1	1	1					
10A	2	119770-00930	GASKET, HEAD MARK 1	1	1	1					1
10B	2	119770-00940	GASKET, HEAD MARK 3	1	1	1					1
10C	2	119770-00950	GASKET, HEAD MARK 5	1	1	1					1
11	2	119770-90070	WASHER	26	26	26					
12	2	119770-90080	BOLT	26	26	26					
14	2	119770-00040	PLUG	1	1	1					
15	2	119770-00050	COVER ASSY	1	1	1					
16	2	119770-00060	GASKET, BONNET	1	1	1					
17	2	119770-00070	CAP ASSY, FILLER	1	1	1					
18	3	119770-90110	GASKET	1	1	1					
19	2	119770-90120	BOLT	14	14	14					
20	2	119770-90130	NUT	2	2	2					
21	2	119770-90140	STUD	2	2	2					
22-1	1	119770-02070	GUIDE, VALVE	2	2	2					2
23-1	1	119770-02080	GUIDE, VALVE 0.05 OS	2	2	2					2

Remarks
(1)REPAIR PART
(2)CORRECT PART
Q'TY. CHANGED:1->2

N:Old ←Yes/No→ New, Q:Old ←No/Yes→ New, R:Old ←Yes/Yes→ New, S:Old ←No/No→ New, W:Add, Z:Discontinued, F:Interchangeable by set, K:Q'ty Change

Copyright (C) YANMAR CO., LTD. All RightsReserved.

Fig.17. CYLINDER HEAD(6LP-ST(Z)E(P)1)

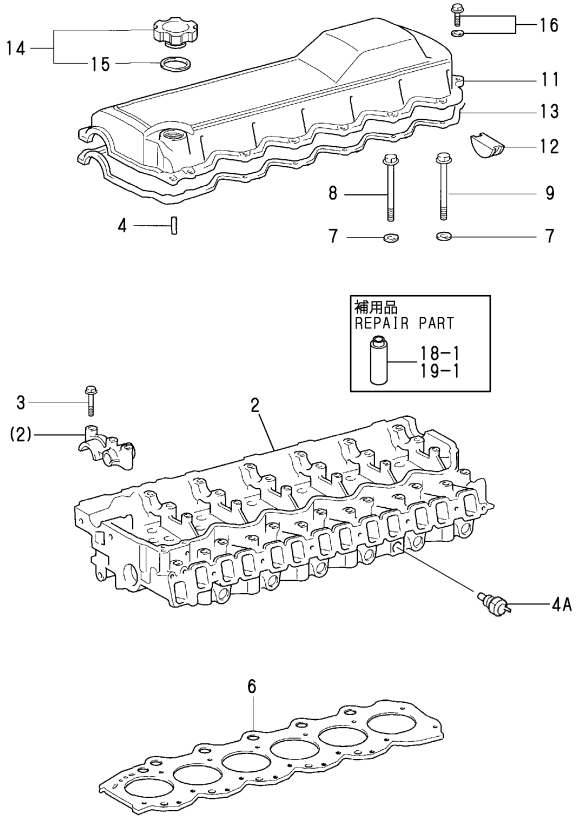

(A)=6LP(A)-DTE(P (D)=6LP(A)-STE(P
(B)=6LP(A-DTZE(P (E)=6LP(A-STZE(P
(C)=6LP(A-DTZEP1 (F)=6LP(A-STZEP1

No.	Lev.	Parts No.	Description	Q'ty (A)	(B)	(C)	(D)	(E)	(F)	I	R
2	2	119771-00012	HEAD ASSY, CYLINDER				1	1	1		
3	2	119771-90060	BOLT				21	21	21		
4	2	119771-90050	PIN				2	2	2		
4A	2	119770-01230	GAUGE				1	1	1	W	
			(D=FROM 1ST) (E=FROM 1ST) (F=FROM 1ST)								
6	2	119771-00401	GASKET, HEAD MARK 1				1	1	1		1
6A	2	119771-00411	GASKET, HEAD MARK 3				1	1	1		1
6B	2	119771-00421	GASKET, HEAD MARK 5				1	1	1		1
7	2	119770-90070	WASHER				26	26	26		
8	2	119771-90070	BOLT				20	20	20		
9	2	119770-90080	BOLT				6	6	6		
11	2	119771-00031	COVER				1	1	1		
12	2	119770-00040	PLUG				1	1	1		
13	2	119771-00041	GASKET, HEAD				1	1	1		
14	2	119770-00070	CAP ASSY, FILLER				1	1	1		
15	3	119770-90110	GASKET				1	1	1		
16	2	119771-90080	BOLT				12	12	12		
18-1	1	119771-02010	GUIDE, VALVE				2	2	2		2
19-1	1	119771-02020	GUIDE, VALVE 0.05 OS				2	2	2		2

Remarks
(1)REPAIR PART
(2)CORRECT PART
Q'TY. CHANGED:1->2

N:Old $\frac{\text{Yes}}{\text{No}}$ New, Q:Old $\frac{\text{No}}{\text{Yes}}$ New, R:Old $\frac{\text{Yes}}{\text{Yes}}$ New, S:Old $\frac{\text{No}}{\text{No}}$ New, W:Add, Z:Discontinued, F:Interchangeable by set, K:Q'ty Change

Copyright (C) YANMAR CO., LTD. All RightsReserved.

Fig.18. ENGINE LIFTER

Y00R5420

Fig. 18 吊り上げ金具 ENGINE LIFTER

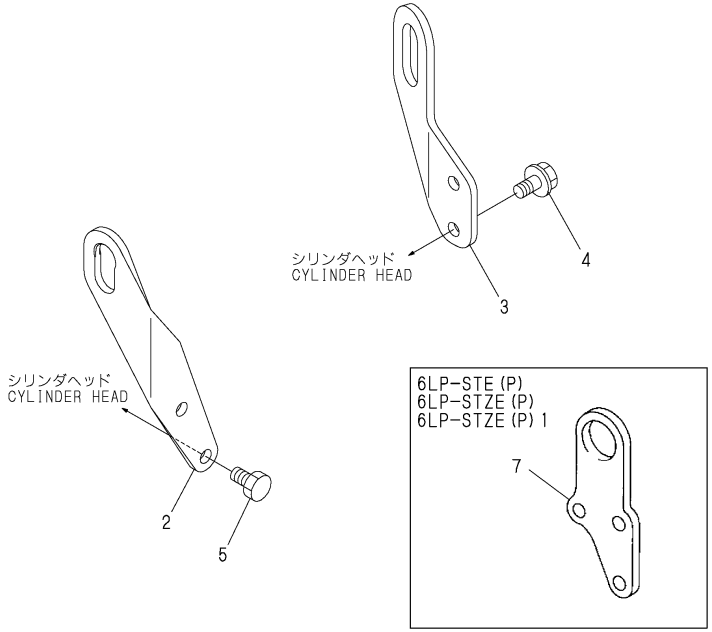

(A)=6LP(A)-DTE(P (D)=6LP(A)-STE(P
(B)=6LP(A-DTZE(P (E)=6LP(A-STZE(P
(C)=6LP(A-DTZEP1 (F)=6LP(A-STZEP1

No.	Lev.	Parts No.	Description	Q'ty (A)	(B)	(C)	(D)	(E)	(F)	I	R
2	2	119770-01190	HANGER, ENGINE	1	1	1					
3	1	119773-07210	LIFTER	1	1	1	1	1	1		
4	1	26106-100182	BOLT, M10X 18 PLATED	2	2	2	2	2	2		
5	1	26156-100202	BOLT, M10X 20 PLATED	1	1	1					
7	1	119771-00440	HANGER, ENGINE				1	1	1		

N:Old $\overset{\text{Yes}}{\underset{\text{No}}{\leftrightarrows}}$ New, Q:Old $\overset{\text{No}}{\underset{\text{Yes}}{\leftrightarrows}}$ New, R:Old $\overset{\text{Yes}}{\underset{\text{Yes}}{\leftrightarrows}}$ New, S:Old $\overset{\text{No}}{\underset{\text{No}}{\leftrightarrows}}$ New, W:Add, Z:Discontinued, F:Interchangeable by set, K:Q'ty Change

Copyright (C) YANMAR CO., LTD. All RightsReserved.

Fig.19. CAMSHAFT(6LP-DT(Z)E(P)1)

P/C NEWS No:Y00R5420-3
PUBLISHED:2005/3

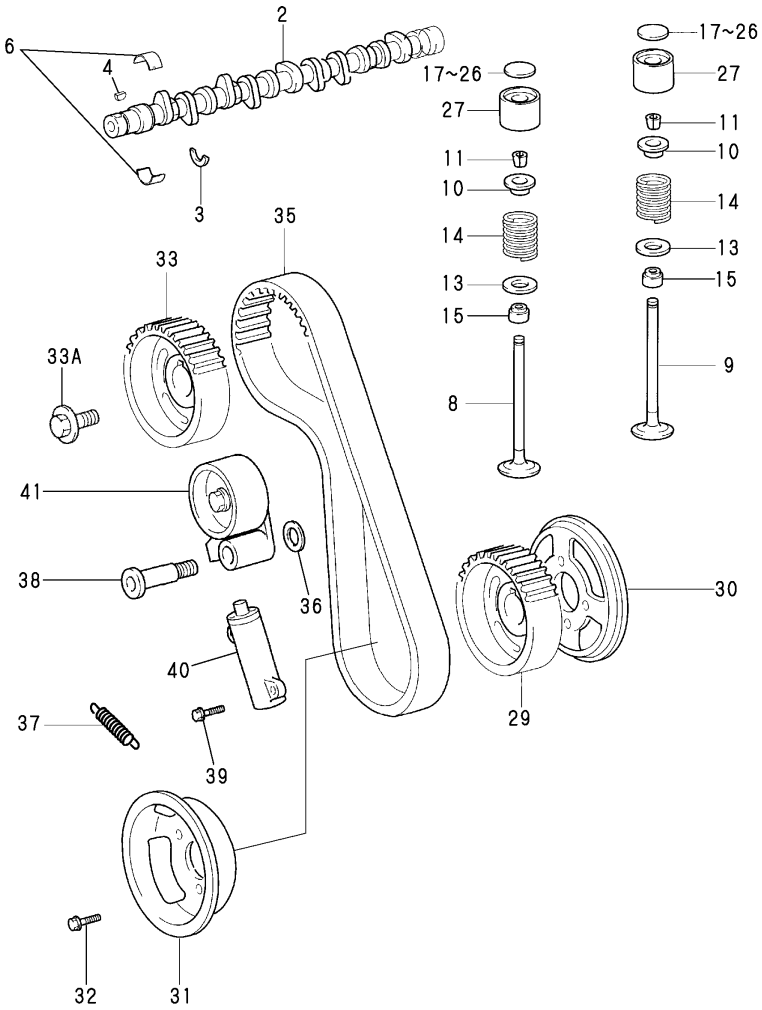

(A)=6LP(A)-DTE(P (D)=6LP(A)-STE(P
(B)=6LP(A-DTZE(P (E)=6LP(A-STZE(P
(C)=6LP(A-DTZEP1 (F)=6LP(A-STZEP1

No.	Lev.	Parts No.	Description	Q'ty (A)	(B)	(C)	(D)	(E)	(F)	I	R
2	2	119770-00330	CAMSHAFT	1	1	1					
3	2	119770-00340	PLATE	1	1	1					
4	2	119770-90510	KEY	1	1	1					
6	2	119770-00120	BEARING	1	1	1					
8	2	119770-00480	VALVE, SUCTION	6	6	6					
9	2	119770-00490	VALVE, EXHAUST	6	6	6					
10	2	119770-00500	RETAINER, SPRING	12	12	12					
11	2	119770-90580	LOCK, SPRING	24	24	24					
13	2	119770-90590	WASHER	12	12	12					
14	2	119770-90600	SPRING	12	12	12					
15	2	119770-91030	SEAL, VALVE STEM	12	12	12					
17	2	119770-00520	SHIM, VALVE ADJUST	12	12	12					
18	2	119770-00530	SHIM, VALVE ADJUST	12	12	12					
19	2	119770-00540	SHIM, VALVE ADJUST	12	12	12					
20	2	119770-00550	SHIM, VALVE ADJUST	12	12	12					
21	2	119770-00560	SHIM, VALVE ADJUST	12	12	12					
22	2	119770-00570	SHIM, VALVE ADJUST	12	12	12					
23	2	119770-00580	SHIM, VALVE ADJUST	12	12	12					
24	2	119770-00590	SHIM, VALVE ADJUST	12	12	12					
25	2	119770-00600	SHIM, VALVE ADJUST	12	12	12					
26	2	119770-00610	SHIM, VALVE ADJUST	12	12	12					
27	2	119770-00510	LIFTER	12	12	12					
29	2	119770-00420	PULLEY	1	1	1					
30	2	119770-00430	FLANGE	1	1	1					
31	2	119770-00440	FLANGE	1	1	1					
32	2	119770-90560	BOLT	4	4	4					
33	2	119770-00410	PULLEY	1	1	1					
33A	2	119770-91040	BOLT	1	1	1				W	
	(A=FROM 1ST)	(B=FROM 1ST)	(C=FROM 1ST)								
35	2	119770-00461	BELT, TIMING 92R2	1	1	1					
36	2	119771-90180	WASHER	1	1	1					
37	2	119770-90570	SPRING	1	1	1					
38	2	119771-00190	SHAFT	1	1	1					
39	2	119771-90170	BOLT	2	2	2					
40	2	119771-00430	TENSIONER	1	1	1					
41	2	119771-00170	IDLER	1	1	1					

N:Old $\xleftrightarrow[\text{No}]{\text{Yes}}$ New, Q:Old $\xleftrightarrow[\text{Yes}]{\text{No}}$ New, R:Old $\xleftrightarrow[\text{Yes}]{\text{Yes}}$ New, S:Old $\xleftrightarrow[\text{No}]{\text{No}}$ New, W:Add, Z:Discontinued, F:Interchangeable by set, K:Q'ty Change

Copyright (C) YANMAR CO., LTD. All RightsReserved.

Fig.20. CAMSHAFT(6LP-ST(Z)E(P)1)

P/C NEWS No:Y00R5420-3
PUBLISHED:2005/3

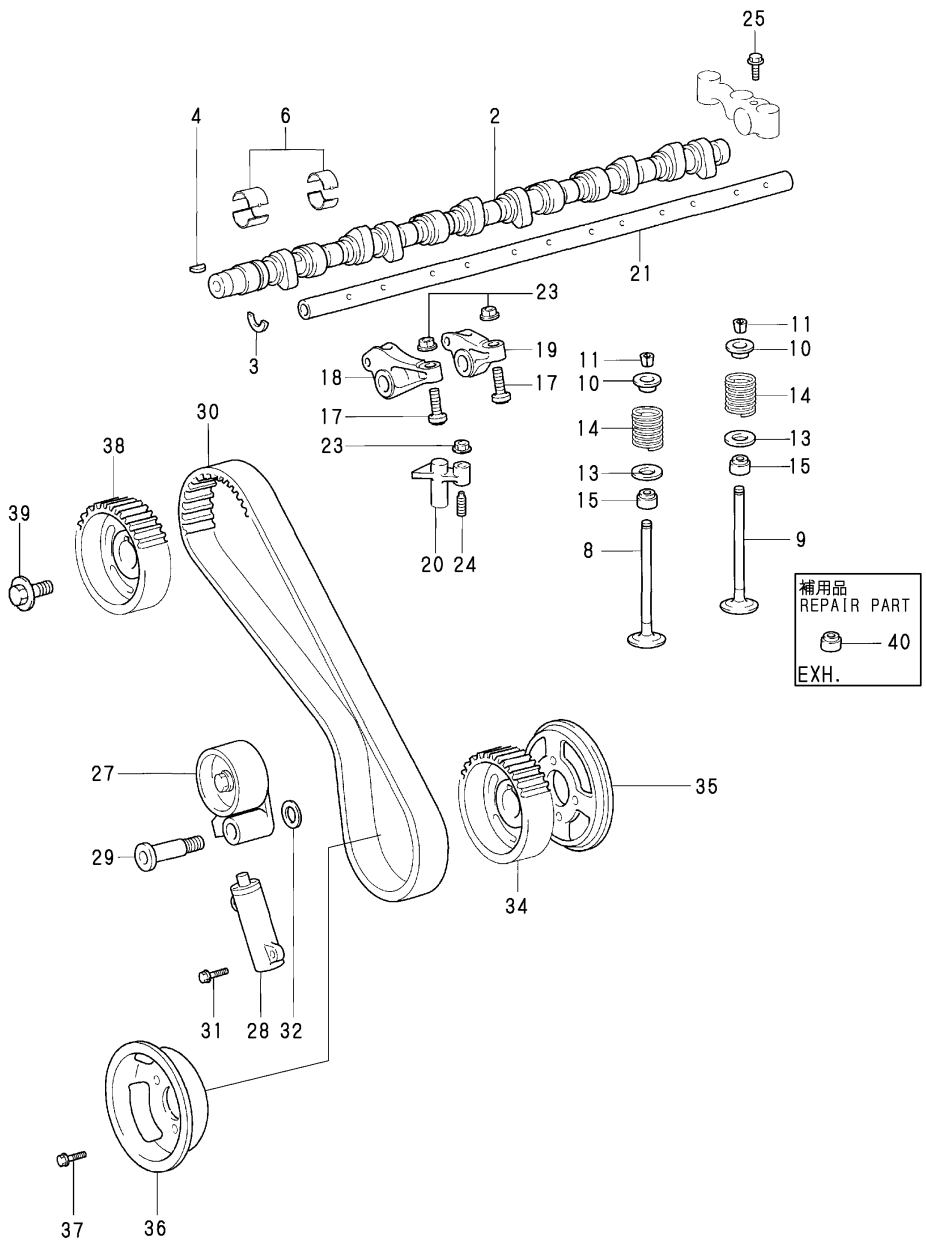

(A)=6LP(A)-DTE(P (D)=6LP(A)-STE(P
(B)=6LP(A-DTZE(P (E)=6LP(A-STZE(P
(C)=6LP(A-DTZEP1 (F)=6LP(A-STZEP1

No.	Lev.	Parts No.	Description	Q'ty (A)	(B)	(C)	(D)	(E)	(F)	I	R
2	2	119771-00121	CAMSHAFT				1	1	1		
3	2	119770-00340	PLATE				1	1	1		
4	2	119770-90510	KEY				1	1	1		
6	2	119771-00051	BEARING SET				1	1	1		
8	2	119771-00210	VALVE, SUCTION				12	12	12		
8-1	2	119771-00211	VALVE, SUCTION				12	12	12	N	
			(D=*2003.06)		(E=*2003.06)			(F=*2003.06)			
9	2	119771-00221	VALVE, EXHAUST				12	12	12		
10	2	119771-00230	RETAINER, SPRING				24	24	24		
11	2	119771-90190	LOCK, SPRING				48	48	48		
13	2	119771-00240	SEAT, SPRING				24	24	24		
14	2	119771-90200	SPRING				24	24	24		
15	2	119771-90210	SEAL, VALVE STEM				24	24	24		
17	2	119771-00250	SCREW				12	12	12		
18	2	119771-00261	ARM ASSY, VALVE				6	6	6		
19	2	119771-00271	ARM ASSY, VALVE				6	6	6		
20	2	119771-00280	BRIDGE, VALVE				12	12	12		
21	2	119771-00290	SHAFT, VALVE				1	1	1		
23	2	119771-90230	NUT				24	24	24		
24	2	119771-90240	SCREW				12	12	12		
25	2	119771-90250	BOLT				2	2	2		
27	2	119771-00170	IDLER				1	1	1		
28	2	119771-00430	TENSIONER				1	1	1		
29	2	119771-00190	SHAFT				1	1	1		
30	2	119771-00200	BELT, TIMING				1	1	1		
30-1	2	119771-00201	BELT, TIMING				1	1	1	R	
			(D=*2001.11)		(E=*2001.11)			(F=*2001.11)			
31	2	119771-90170	BOLT				2	2	2		
32	2	119771-90180	WASHER				1	1	1		
34	2	119770-00420	PULLEY				1	1	1	W	
			(D=FROM 1ST)		(E=FROM 1ST)			(F=FROM 1ST)			
35	2	119770-00430	FLANGE				1	1	1	W	
			(D=FROM 1ST)		(E=FROM 1ST)			(F=FROM 1ST)			
36	2	119770-00440	FLANGE				1	1	1	W	
			(D=FROM 1ST)		(E=FROM 1ST)			(F=FROM 1ST)			
37	2	119770-90560	BOLT				4	4	4	W	
			(D=FROM 1ST)		(E=FROM 1ST)			(F=FROM 1ST)			
38	2	119770-00410	PULLEY				1	1	1	W	
			(D=FROM 1ST)		(E=FROM 1ST)			(F=FROM 1ST)			
39	2	119770-91040	BOLT				1	1	1	W	
			(D=FROM 1ST)		(E=FROM 1ST)			(F=FROM 1ST)			
40	1	119775-11340	SEAL, VALVE STEM				12	12	12		

N:Old $\overset{\text{Yes}}{\underset{\text{No}}{\leftrightarrows}}$ New, Q:Old $\overset{\text{No}}{\underset{\text{Yes}}{\leftrightarrows}}$ New, R:Old $\overset{\text{Yes}}{\underset{\text{Yes}}{\leftrightarrows}}$ New, S:Old $\overset{\text{No}}{\underset{\text{No}}{\leftrightarrows}}$ New, W:Add, Z:Discontinued, F:Interchangeable by set, K:Q'ty Change

Copyright (C) YANMAR CO., LTD. All RightsReserved.

Fig.21. CRANKSHAFT

P/C NEWS No:Y00R5420-4
PUBLISHED:2005/5

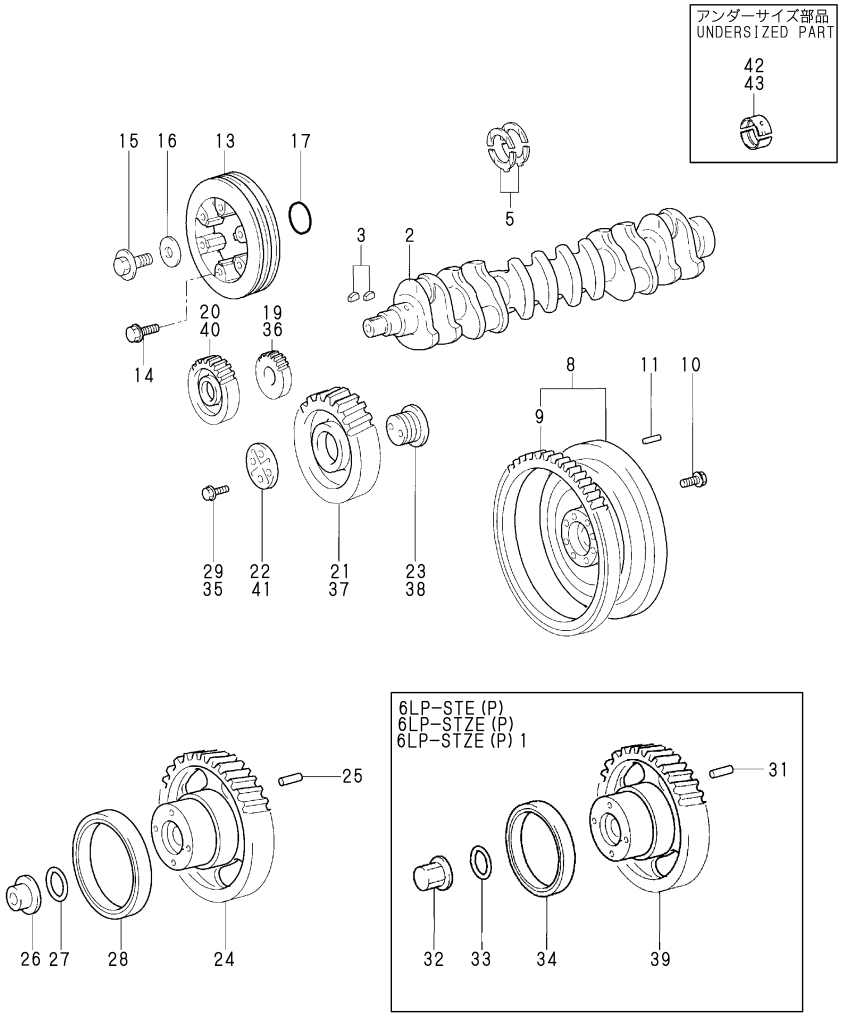

(A)=6LP(A)-DTE(P (D)=6LP(A)-STE(P
(B)=6LP(A-DTZE(P (E)=6LP(A-STZE(P
(C)=6LP(A-DTZEP1 (F)=6LP(A-STZEP1

No.	Lev.	Parts No.	Description	Q'ty (A)	(B)	(C)	(D)	(E)	(F)	I	R
2	2	119770-00292	CRANKSHAFT	1	1	1	1	1	1		
3	2	119770-90440	KEY	2	2	2	2	2	2		
5	2	119770-00130	WASHER SET	1	1	1	1	1	1		
8	2	119770-00300	FLYWHEEL ASSY	1	1	1	1	1	1		
9	3	119770-00310	GEAR, RING	1	1	1	1	1	1		
10	2	119770-90450	BOLT	8	8	8	8	8	8		
11	2	119770-90460	PIN	3	3	3	3	3	3		
13	2	119770-00320	PULLEY ASSY	1	1	1	1	1	1		
14	2	119770-90470	BOLT	6	6	6	6	6	6		
15	2	119770-90480	BOLT	1	1	1	1	1	1		
16	2	119770-90490	WASHER	1	1	1	1	1	1		
17	2	119770-90500	O-RING	1	1	1	1	1	1		
19	2	119770-00350	GEAR, CRANKSHAFT	1	1	1					
20	2	119770-00360	GEAR, PUMP	1	1	1					
21	2	119770-00370	GEAR	1	1	1					
22	2	119770-00381	PLATE	1	1	1					
23	2	119770-00390	SHAFT	1	1	1					
23-1	2	119771-00151	SHAFT	1	1	1				N	
	(A=*2003.06)	(B=*2003.06)	(C=*2003.06)								
24	2	119770-00400	GEAR, PUMP	1	1	1					
25	2	119770-90160	PIN, PARALLEL	1	1	1					
26	2	119770-90520	NUT	1	1	1					
27	2	119770-90530	O-RING	1	1	1					
28	2	119770-90540	BEARING, BALL	1	1	1					
29	2	119770-90550	BOLT	2	2	2					
31	2	119770-90160	PIN, PARALLEL				1	1	1		
32	2	119770-90520	NUT				1	1	1		
33	2	119770-90530	O-RING				1	1	1		
34	2	119770-90540	BEARING, BALL				1	1	1		
35	2	119770-90550	BOLT				2	2	2		
36	2	119771-00131	GEAR, CRANKSHAFT				1	1	1		
37	2	119771-00141	GEAR				1	1	1		
38	2	119771-00151	SHAFT				1	1	1		
39	2	119771-00160	GEAR				1	1	1		
40	2	119770-00360	GEAR, PUMP				1	1	1		
41	2	119770-00381	PLATE				1	1	1		
42	1	119770-02031	METAL, MAIN 0.25 US	1	1	1	1	1	1		2
43	1	119770-02041	METAL, MAIN 0.50 US	1	1	1	1	1	1		3

Remarks
(1)REFER TO INTRODUCTION
(2)UNDER SIZED(U.S.=0.25)PART 7 SET
(3)UNDER SIZED(U.S.=0.50)PART 7 SET

N:Old $\overset{\text{Yes}}{\underset{\text{No}}{\leftrightarrow}}$ New, Q:Old $\overset{\text{No}}{\underset{\text{Yes}}{\leftrightarrow}}$ New, R:Old $\overset{\text{Yes}}{\underset{\text{Yes}}{\leftrightarrow}}$ New, S:Old $\overset{\text{No}}{\underset{\text{No}}{\leftrightarrow}}$ New, W:Add, Z:Discontinued, F:Interchangeable by set, K:Q'ty Change

Copyright (C) YANMAR CO., LTD. All RightsReserved.

Fig.22. DAMPER

(A)=6LP(A)-DTE(P
(B)=6LP(A-DTZE(P
(C)=6LP(A-DTZEP1
(D)=6LP(A)-STE(P
(E)=6LP(A-STZE(P
(F)=6LP(A-STZEP1

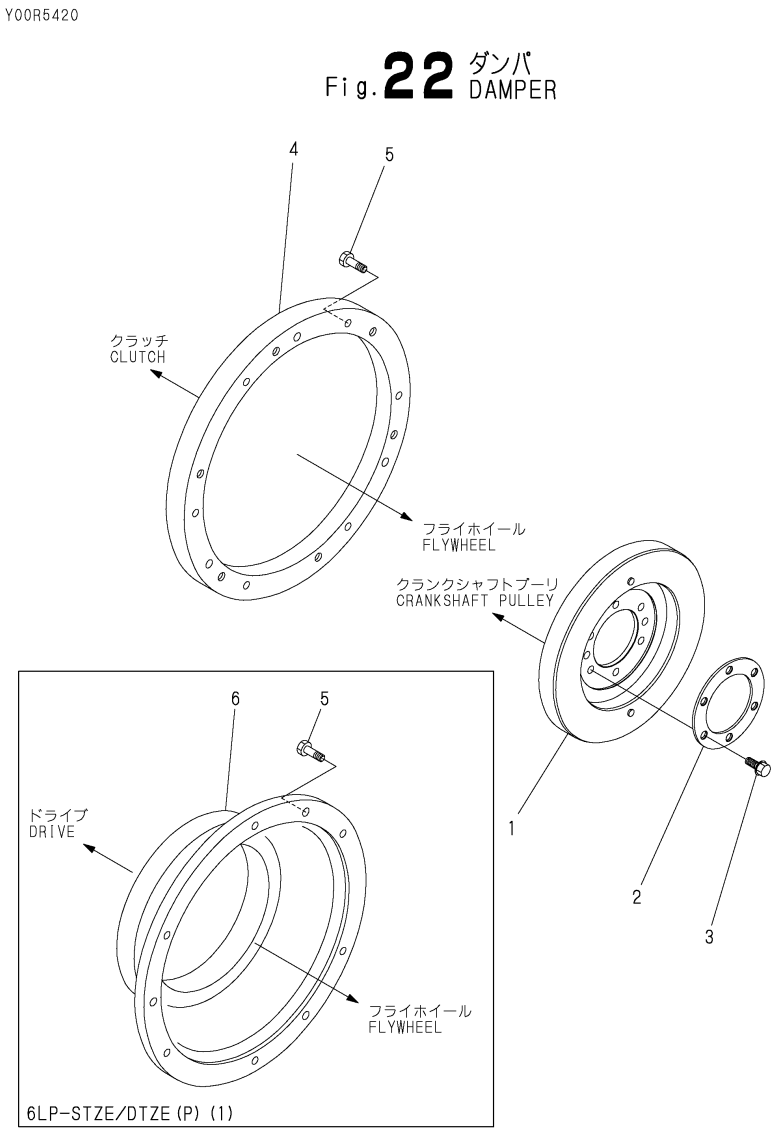

No.	Lev.	Parts No.	Description	Q'ty (A)	(B)	(C)	(D)	(E)	(F)	I	R
1	1	119773-28010	DAMPER	1	1	1	1	1	1		
2	1	119773-28500	SPACER	1	1	1	1	1	1		
3	1	119773-28600	BOLT, M8X20	6	6	6	6	6	6		
4	1	119773-21500	SPACER, FLYWHEEL	1			1				
5	1	119005-77350	BOLT, M8X25	6	6	6	6	6	6		
6	1	119778-21500	SPACER, FLYWHEEL		1	1		1	1		

N:Old $\xleftrightarrow[\text{No}]{\text{Yes}}$ New, Q:Old $\xleftrightarrow[\text{Yes}]{\text{No}}$ New, R:Old $\xleftrightarrow[\text{Yes}]{\text{Yes}}$ New, S:Old $\xleftrightarrow[\text{No}]{\text{No}}$ New, W:Add, Z:Discontinued, F:Interchangeable by set, K:Q'ty Change

Copyright (C) YANMAR CO., LTD. All RightsReserved.

Fig.23. PISTON & CONNECTING ROD

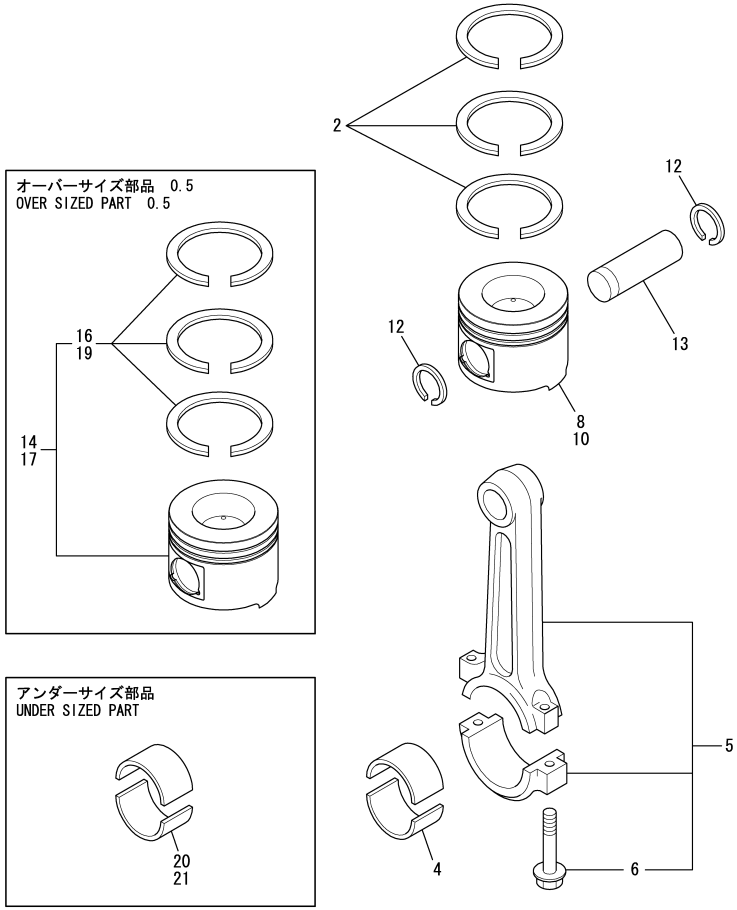

(A)=6LP(A)-DTE(P (D)=6LP(A)-STE(P
(B)=6LP(A-DTZE(P (E)=6LP(A-STZE(P
(C)=6LP(A-DTZEP1 (F)=6LP(A-STZEP1

No.	Lev.	Parts No.	Description	Q'ty (A)	(B)	(C)	(D)	(E)	(F)	I	R
2	2	119770-00250	RING SET, PISTON	1	1	1	1	1	1		5
4	2	119770-00260	BEARING SET, MARK 2	6	6	6	6	6	6		1
4A	2	119770-01010	BEARING SET, MARK 3	6	6	6	6	6	6		1
4B	2	119770-01020	BEARING SET, MARK 4	6	6	6	6	6	6		1
4C	2	119770-01030	BEARING SET, MARK 5	6	6	6	6	6	6		1
4D	2	119770-01040	BEARING SET, MARK 6	6	6	6	6	6	6		1
5	2	119770-00270	ROD ASSY, CONNECTING	6	6	6	6	6	6		
6	3	119770-00280	BOLT, ROD	12	12	12	12	12	12		
8	1	119773-22010	PISTON	6	6	6					
10	1	119775-22012	PISTON				6	6	6		
12	1	119770-90430	CIRCLIP	12	12	12	12	12	12		
13	1	119770-02010	PIN, PISTON	6	6	6	6	6	6		
14	1	719773-22100	PISTON ASSY, O.50 OS	1	1	1					2
16	2	119770-01180	RING SET, PISTON .50	1	1	1					2
17	1	719775-22100	PISTON ASSY, O.50 OS				1	1	1		2
19	2	119770-01180	RING SET, PISTON .50				1	1	1		2
20	1	119770-02050	METAL, CRANK PIN .25	1	1	1	1	1	1		3
21	1	119770-02060	METAL, CRANK PIN .50	1	1	1	1	1	1		4

Remarks
(1)Refer to introduction.
(2)Over-sized(O.S.=0.5) parts 6 set.
(3)Under-sized(U.S.=0.25) parts 6 set.
(4)Under-sized(U.S.=0.5) parts 6 set.
(5)6 set.

N:Old ←Yes/No→ New, Q:Old ←No/Yes→ New, R:Old ←Yes/Yes→ New, S:Old ←No/No→ New, W:Add, Z:Discontinued, F:Interchangeable by set, K:Q'ty Change

Copyright (C) YANMAR CO., LTD. All RightsReserved.

Fig.24. LUB. OIL COOLER

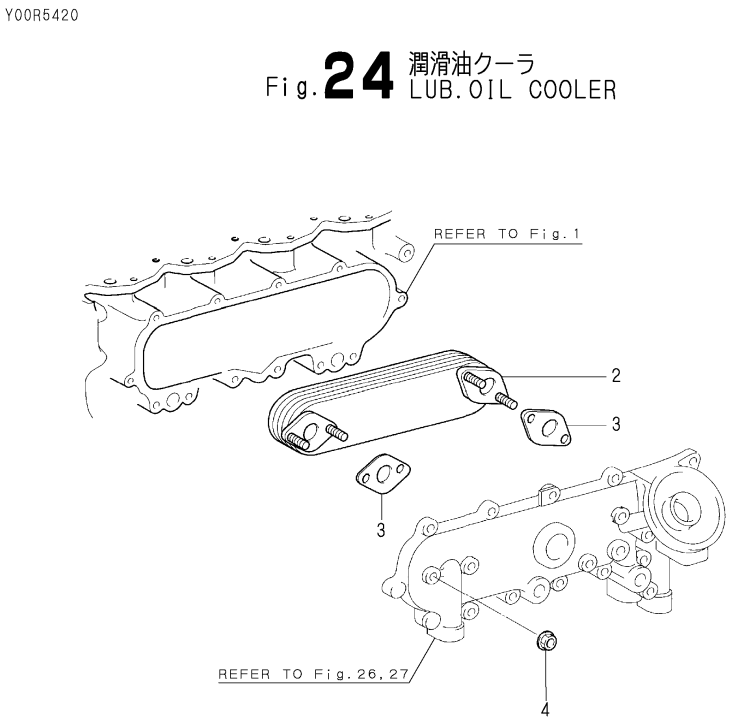

(A)=6LP(A)-DTE(P (D)=6LP(A)-STE(P
(B)=6LP(A-DTZE(P (E)=6LP(A-STZE(P
(C)=6LP(A-DTZEP1 (F)=6LP(A-STZEP1

No.	Lev.	Parts No.	Description	Q'ty (A)	(B)	(C)	(D)	(E)	(F)	I	R
2	2	119770-00650	COOLER ASSY, OIL	1	1	1	1	1	1		
3	2	119770-00660	GASKET	2	2	2	2	2	2		
4	2	119770-90630	NUT	4	4	4	4	4	4		

N:Old $\overset{\text{Yes}}{\underset{\text{No}}{\leftrightarrow}}$ New, Q:Old $\overset{\text{No}}{\underset{\text{Yes}}{\leftrightarrow}}$ New, R:Old $\overset{\text{Yes}}{\underset{\text{Yes}}{\leftrightarrow}}$ New, S:Old $\overset{\text{No}}{\underset{\text{No}}{\leftrightarrow}}$ New, W:Add, Z:Discontinued, F:Interchangeable by set, K:Q'ty Change

Copyright (C) YANMAR CO., LTD. All RightsReserved.

Fig.25. LUB. OIL COOLER(6LP-ST(Z)E(P)1)

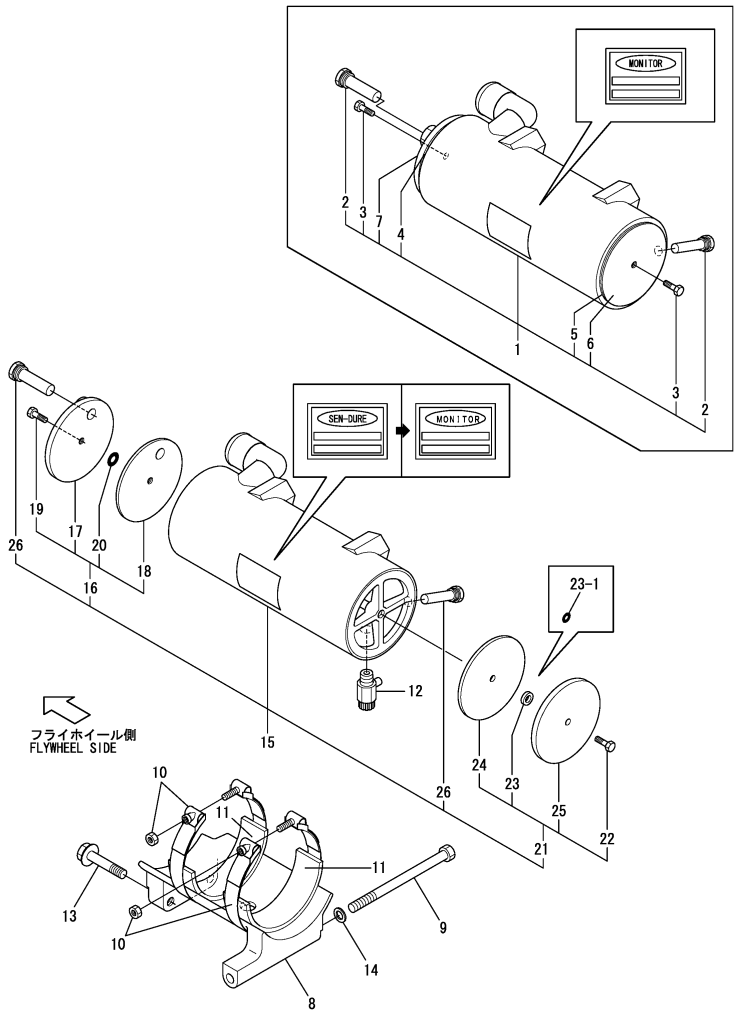

Remarks
(1)There are a KIT and interchangeability of No.16 or No.21.(Not interchangeable single part.) (2)There are a KIT and interchangeability of No.16. (Not interchangeable single part.)
(3)There are a KIT and interchangeability of No.21.(Not interchangeable single part.) (4)Manufacturer change.
MONITOR INC.(No.1)->SEN-DURE INC. (No.15)->MONITOR INC.(No.15).
part number doesn't have the change.

(A)=6LP(A)-DTE(P (D)=6LP(A)-STE(P
(B)=6LP(A-DTZE(P (E)=6LP(A-STZE(P
(C)=6LP(A-DTZEP1 (F)=6LP(A-STZEP1

No.	Lev.	Parts No.	Description	Q'ty (A)	(B)	(C)	(D)	(E)	(F)	I	R
1	1	119775-33000	COOLER, OIL				1	1	1		4
2	2	119574-44150	ZINC, ANTI-CORROSIVE				2	2	2		
3	2	119574-44180	BOLT, UNC 3/8				2	2	2		1
4	2	119773-33070	GASKET				1	1	1		2
5	2	119773-33080	GASKET				1	1	1		3
6	2	119773-33060	COVER ASSY				1	1	1		3
7	2	119773-33050	COVER ASSY				1	1	1		2
8	1	119775-33151	BRACKET				1	1	1		
9	1	119775-33170	BOLT, M10X140				1	1	1		
10	1	119775-33200	CLAMP, BOLT				2	2	2		
11	1	119775-33650	SEAT, RUBBER				2	2	2		
12	1	119620-49290	COCK ASSY, 1/4				1	1	1		
13	1	26106-100502	BOLT, M10X 50 PLATED				2	2	2		
14	1	22117-100000	WASHER, 10				1	1	1		
15	1	119775-33000	COOLER, OIL				1	1	1		4
16	2	119775-33100	COVER KIT				1	1	1	W	
			(D=*2007.04)		(E=*2007.04)			(F=*2007.04)			
17	3	119775-33060	COVER				1	1	1		
18	3	119775-33070	GASKET, 4 INCH				1	1	1		
19	3	119175-33340	BOLT, UNC 3/8-16X3/4				1	1	1		
20	3	119175-33350	O-RING				1	1	1		
21	2	119175-33320	COVER KIT				1	1	1	W	
			(D=*2007.04)		(E=*2007.04)			(F=*2007.04)			
22	3	119175-33330	BOLT, UNC 3/8-16X5/8				1	1	1		
23	3	119175-33360	GASKET				1	1	1		
23-1	3	119175-33350	O-RING				1	1	1	R	
			(D=EXXXXX)		(E=EXXXXX)			(F=EXXXXX)			
24	3	119175-33370	GASKET, 4 INCH				1	1	1		
25	3	119175-33390	COVER				1	1	1		
26	2	119574-44150	ZINC, ANTI-CORROSIVE				2	2	2		

N:Old $\frac{\text{Yes}}{\text{No}}$ New, Q:Old $\frac{\text{No}}{\text{Yes}}$ New, R:Old $\frac{\text{Yes}}{\text{Yes}}$ New, S:Old $\frac{\text{No}}{\text{No}}$ New, W:Add, Z:Discontinued, F:Interchangeable by set, K:Q'ty Change

Copyright (C) YANMAR CO., LTD. All RightsReserved.

Fig.26. LUB. OIL COOLER COVER(6LP-DT(Z)

Y00R5420

Fig. 26 潤滑油クーラカバー（6LP−DT（Z）E（P）（1））
LUB. OIL COOLER COVER (6LP−DT (Z) E (P) (1))

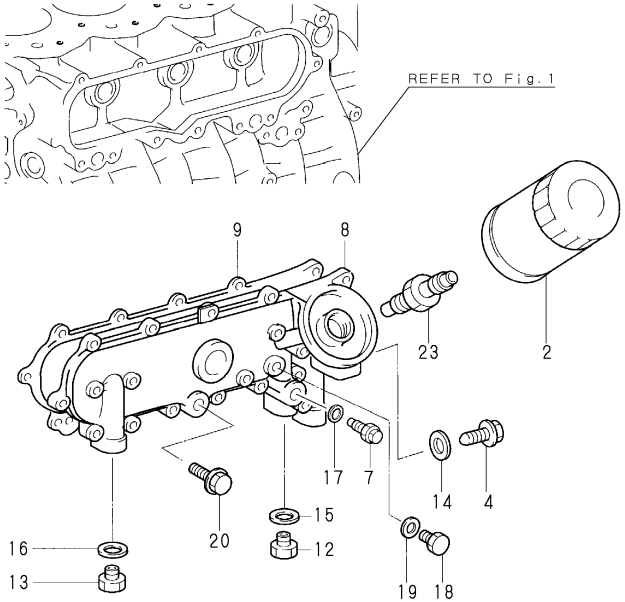

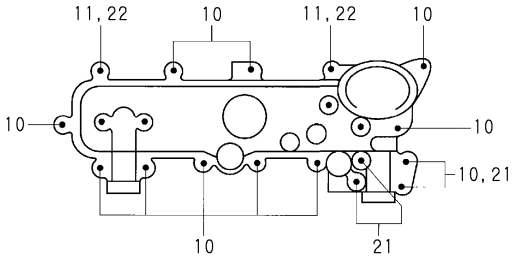

(A)=6LP(A)-DTE(P
(B)=6LP(A-DTZE(P
(C)=6LP(A-DTZEP1
(D)=6LP(A)-STE(P
(E)=6LP(A-STZE(P
(F)=6LP(A-STZEP1

No.	Lev.	Parts No.	Description	Q'ty (A)	(B)	(C)	(D)	(E)	(F)	I	R
2	2	119770-90620	FILTER, OIL	1	1	1					
4	2	119770-00670	VALVE ASSY, OIL	1	1	1					
7	2	119770-00680	VALVE ASSY, COOLER	1	1	1					
8	2	119770-00692	COVER	1	1	1					
9	2	119770-00710	GASKET	1	1	1					
10	2	119770-90260	BOLT	12	12	12					
11	2	119770-90630	NUT	2	2	2					
12	2	119770-90650	PLUG	1	1	1					
13	2	119770-90660	PLUG	2	2	2					
14	2	119770-90670	GASKET	1	1	1					
15	2	119770-90680	GASKET	1	1	1					
16	2	119770-90690	GASKET	2	2	2					
17	2	119770-90700	GASKET	1	1	1					
18	2	119770-90710	PLUG	1	1	1					
19	2	119770-90720	GASKET	1	1	1					
20	2	119770-90730	PLUG	1	1	1					
21	2	119770-90740	BOLT	2	2	2					
22	2	119770-90750	STUD	2	2	2					
23	2	119770-00700	SCREW	1	1	1					

N:Old ◄Yes/No► New, Q:Old ◄No/Yes► New, R:Old ◄Yes/Yes► New, S:Old ◄No/No► New, W:Add, Z:Discontinued, F:Interchangeable by set, K:Q'ty Change

Copyright (C) YANMAR CO., LTD. All RightsReserved.

Fig.27. LUB. OIL COOLER COVER(6LP-ST(Z)

(A)=6LP(A)-DTE(P
(B)=6LP(A-DTZE(P
(C)=6LP(A-DTZEP1
(D)=6LP(A)-STE(P
(E)=6LP(A-STZE(P
(F)=6LP(A-STZEP1

Y00R5420

Fig.27 潤滑油クーラカバー(6LP-ST(Z)E(P)(1))
LUB.OIL COOLER COVER(6LP-ST(Z)E(P)(1))

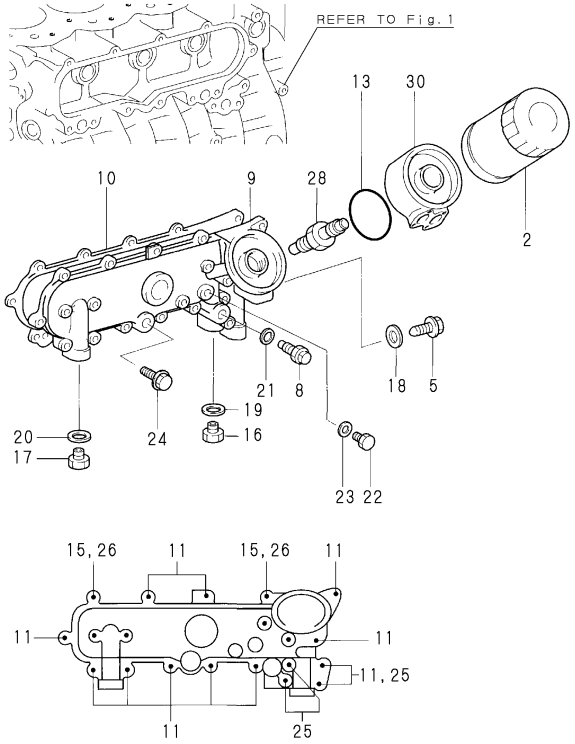

No.	Lev.	Parts No.	Description	Q'ty (A)	(B)	(C)	(D)	(E)	(F)	I	R
2	2	119770-90620	FILTER, OIL				1	1	1		
5	2	119770-00670	VALVE ASSY, OIL				1	1	1		
8	2	119770-00680	VALVE ASSY, COOLER				1	1	1		
9	2	119770-00692	COVER				1	1	1		
10	2	119770-00710	GASKET				1	1	1		
11	2	119770-90260	BOLT				12	12	12		
13	2	119771-90270	O-RING, D20				2	2	2		M
13-1	2	119771-90260	O-RING, D80				1	1	1		
15	2	119770-90630	NUT				2	2	2		
16	2	119770-90650	PLUG				1	1	1		
17	2	119770-90660	PLUG				1	1	1		
18	2	119770-90670	GASKET				1	1	1		
19	2	119770-90680	GASKET				1	1	1		
20	2	119770-90690	GASKET				2	2	2		
21	2	119770-90700	GASKET				1	1	1		
22	2	119770-90710	PLUG				1	1	1		
23	2	119770-90720	GASKET				1	1	1		
24	2	119770-90730	PLUG				1	1	1		
25	2	119770-90740	BOLT				2	2	2		
26	2	119770-90750	STUD				2	2	2		
28	2	119775-35080	UNION ASSY				1	1	1		
30	2	119775-35060	SPACER				1	1	1		

Remarks
(M)MISPRINT:REFER TO THE NEXT ITEM.

N:Old ←Yes/No→ New, Q:Old ←No/Yes→ New, R:Old ←Yes/Yes→ New, S:Old ←No/No→ New, W:Add, Z:Discontinued, F:Interchangeable by set, K:Q'ty Change

Copyright (C) YANMAR CO., LTD. All RightsReserved.

Fig.28. LUB. OIL PIPE

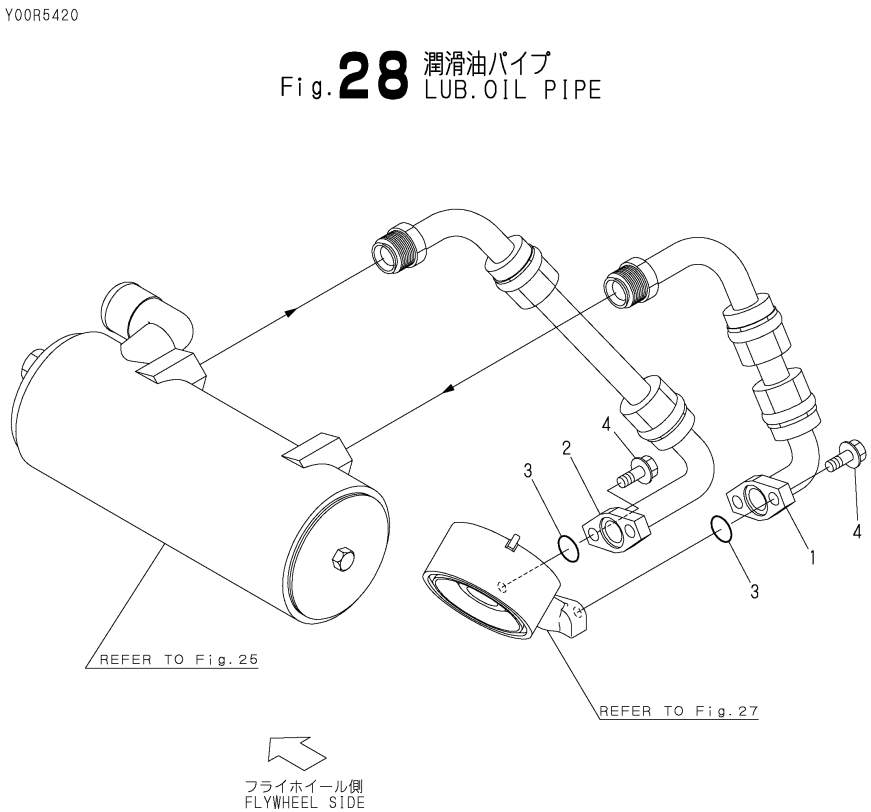

(A)=6LP(A)-DTE(P (D)=6LP(A)-STE(P
(B)=6LP(A-DTZE(P (E)=6LP(A-STZE(P
(C)=6LP(A-DTZEP1 (F)=6LP(A-STZEP1

No.	Lev.	Parts No.	Description	Q'ty (A)	(B)	(C)	(D)	(E)	(F)	I	R
1	1	119775-39121	PIPE ASSY, OIL				1	1	1		
2	1	119775-39141	PIPE ASSY, OIL				1	1	1		
3	1	24311-000200	O-RING, 1AP20.0				2	2	2		
4	1	26106-080202	BOLT, M8X 20 PLATED				4	4	4		

N:Old $\xleftrightarrow[\text{No}]{\text{Yes}}$ New, Q:Old $\xleftrightarrow[\text{Yes}]{\text{No}}$ New, R:Old $\xleftrightarrow[\text{Yes}]{\text{Yes}}$ New, S:Old $\xleftrightarrow[\text{No}]{\text{No}}$ New, W:Add, Z:Discontinued, F:Interchangeable by set, K:Q'ty Change

Copyright (C) YANMAR CO., LTD. All RightsReserved.

Fig.29. LUB. OIL PIPE(TURBINE)

(A)=6LP(A)-DTE(P
(B)=6LP(A-DTZE(P
(C)=6LP(A-DTZEP1
(D)=6LP(A)-STE(P
(E)=6LP(A-STZE(P
(F)=6LP(A-STZEP1

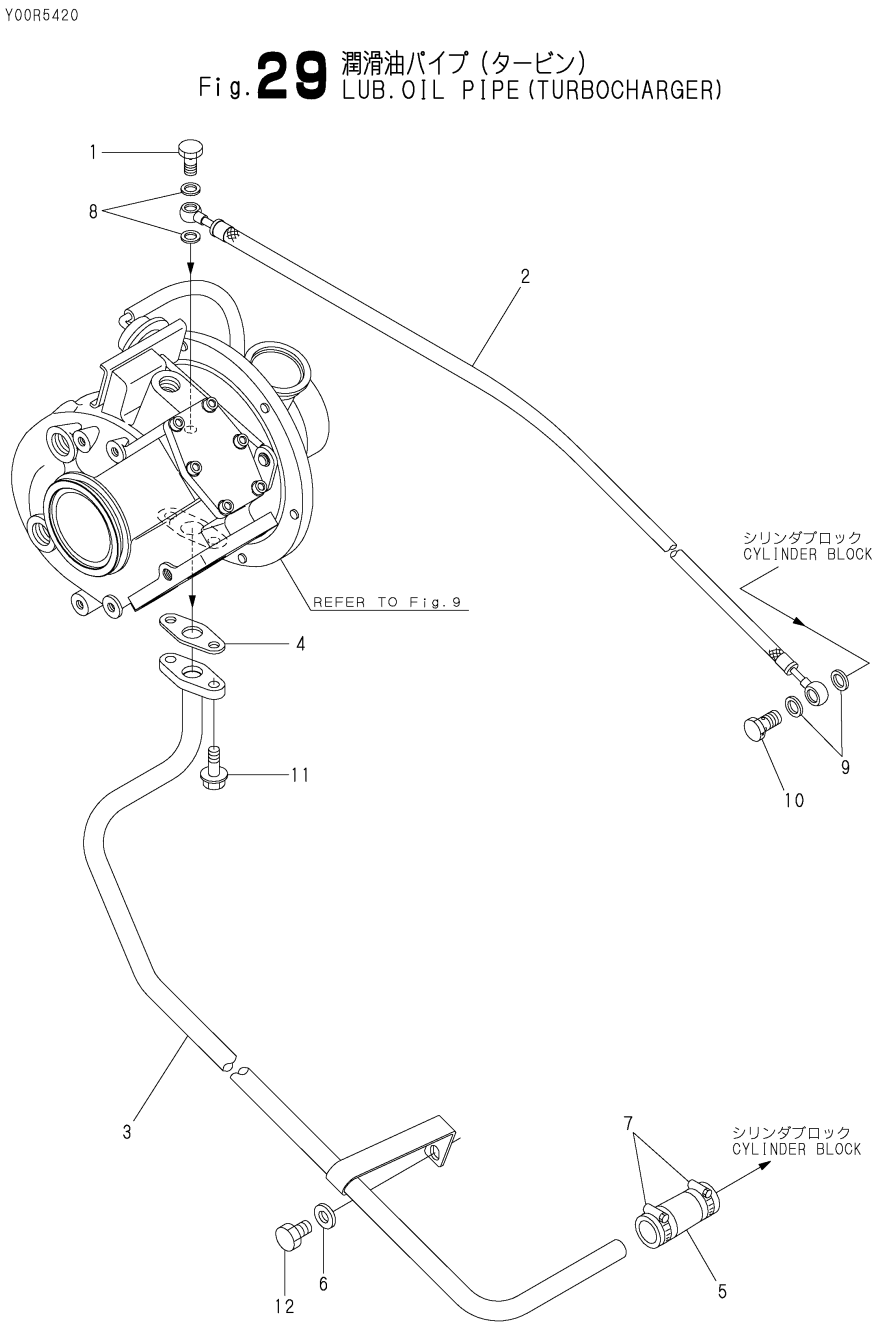

No.	Lev.	Parts No.	Description	Q'ty (A)	(B)	(C)	(D)	(E)	(F)	I	R
1	1	121252-39150	BOLT, JOINT M10X1.5	1	1	1	1	1	1		
2	1	119773-39610	PIPE ASSY, OIL	1	1	1	1	1	1		
3	1	119773-39671	PIPE ASSY, OIL	1	1	1	1	1	1		
4	1	119593-39690	GASKET	1	1	1	1	1	1		
5	1	119773-39820	JOINT	1	1	1	1	1	1		
6	1	22117-120000	WASHER, 12	1	1	1	1	1	1		
7	1	23000-028000	CLAMP, 28	2	2	2	2	2	2		
8	1	23414-100000	GASKET, 10X1.0	2	2	2	2	2	2		
9	1	23414-120000	GASKET, 12X1.0	2	2	2	2	2	2		
10	1	23857-060000	BOLT, JOINT 6	1	1	1	1	1	1		
11	1	26106-100222	BOLT, M10X 22 PLATED	2	2	2	2	2	2		
12	1	26156-120202	BOLT, M12X 20 PLATED	1	1	1	1	1	1		

N:Old $\overset{\text{Yes}}{\underset{\text{No}}{\leftrightarrow}}$ New, Q:Old $\overset{\text{No}}{\underset{\text{Yes}}{\leftrightarrow}}$ New, R:Old $\overset{\text{Yes}}{\underset{\text{Yes}}{\leftrightarrow}}$ New, S:Old $\overset{\text{No}}{\underset{\text{No}}{\leftrightarrow}}$ New, W:Add, Z:Discontinued, F:Interchangeable by set, K:Q'ty Change

Copyright (C) YANMAR CO., LTD. All RightsReserved.

Fig.30. OIL SUCTION/DRAIN PUMP

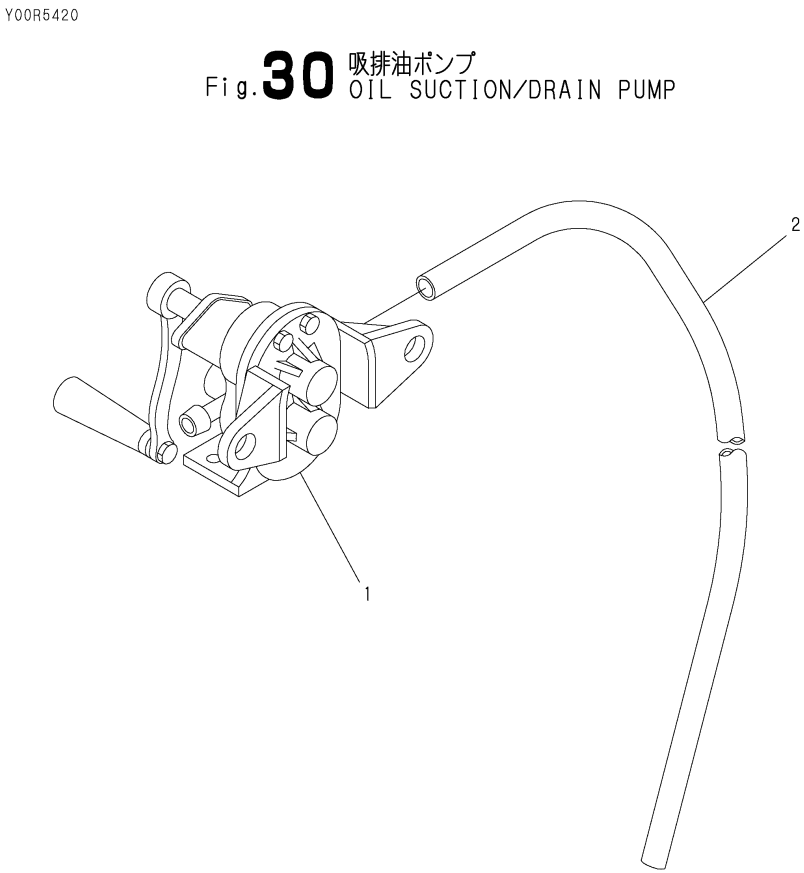

(A)=6LP(A)-DTE(P (D)=6LP(A)-STE(P
(B)=6LP(A-DTZE(P (E)=6LP(A-STZE(P
(C)=6LP(A-DTZEP1 (F)=6LP(A-STZEP1

No.	Lev.	Parts No.	Description	Q'ty (A)	(B)	(C)	(D)	(E)	(F)	I	R
1	1	124413-39100	PUMP ASSY, WASTE	1	1	1	1	1	1		
2	1	43720-001220	PIPE	1	1	1	1	1	1		

N:Old $\xleftarrow[\text{No}]{\text{Yes}}$ New, Q:Old $\xleftarrow[\text{Yes}]{\text{No}}$ New, R:Old $\xleftarrow[\text{Yes}]{\text{Yes}}$ New, S:Old $\xleftarrow[\text{No}]{\text{No}}$ New, W:Add, Z:Discontinued, F:Interchangeable by set, K:Q'ty Change

Copyright (C) YANMAR CO., LTD. All RightsReserved.

Fig.31. COOLING SEA WATER PUMP

Y00R5420

Fig.31 冷却水ポンプ（海水）
COOLING SEA WATER PUMP

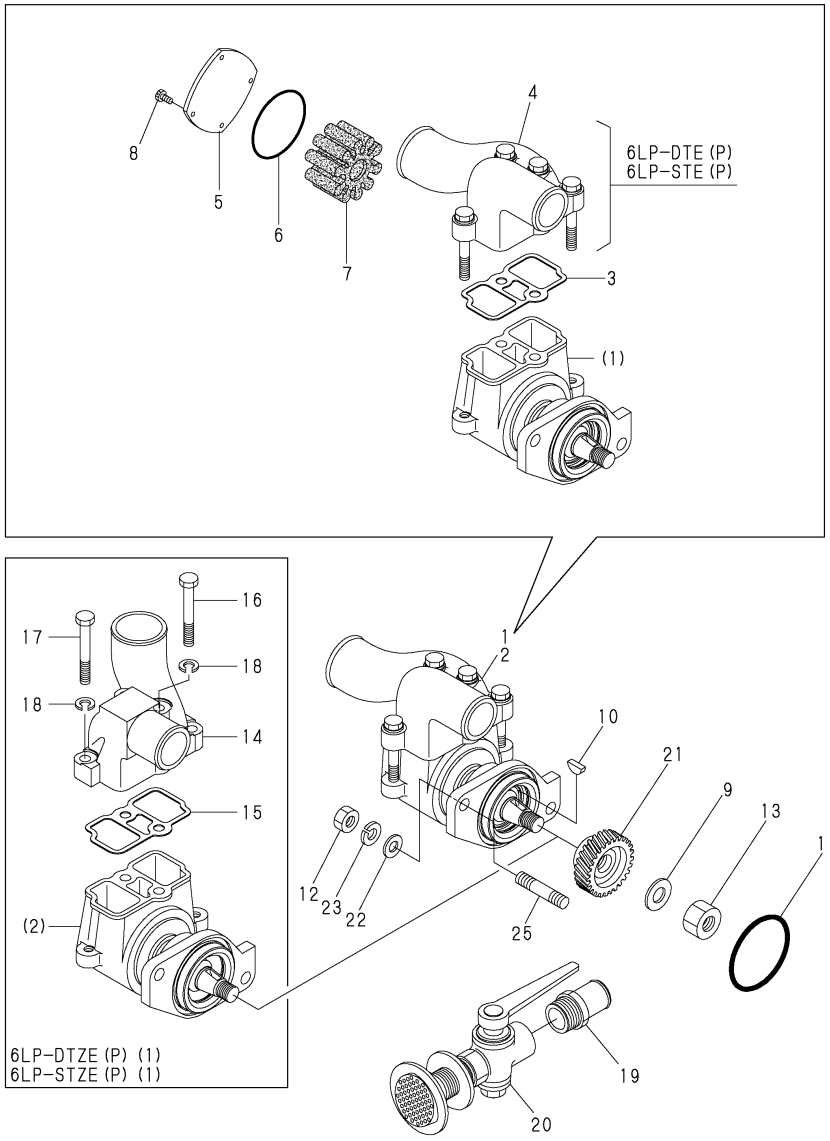

(A)=6LP(A)-DTE(P (D)=6LP(A)-STE(P
(B)=6LP(A-DTZE(P (E)=6LP(A-STZE(P
(C)=6LP(A-DTZEP1 (F)=6LP(A-STZEP1

No.	Lev.	Parts No.	Description	Q'ty (A)	(B)	(C)	(D)	(E)	(F)	I	R
1	1	119773-42500	PUMP ASSY, WATER	1			1				
2	1	119773-42650	PUMP ASSY, WATER		1	1		1	1		
3	2	119787-42570	GASKET, WATER PUMP	1			1				
4	2	119773-42550	JOINT, HOSE	1			1				
5	2	129670-42520	COVER	1	1	1	1	1	1		
6	2	119773-42570	O-RING	1	1	1	1	1	1		
7	2	119773-42600	IMPELLER	1	1	1	1	1	1		
8	2	119175-42620	SCREW	4	4	4	4	4	4		
9	1	22117-140000	WASHER, 14	1	1	1	1	1	1		
10	1	22522-050160	KEY, WOODRUFF 5X16	1	1	1	1	1	1		
11	1	24321-000650	O-RING, 1AG65.0	1	1	1	1	1	1		
12	1	26736-100002	NUT, M10	2	2	2	2	2	2		
13	1	26736-140002	NUT, M14	1	1	1	1	1	1		
14	1	119787-42550	JOINT		1	1		1	1		
15	1	119787-42570	GASKET, WATER PUMP		1	1		1	1		
16	1	26203-080702	BOLT, M8X 70 PLATED		2	2		2	2		
17	1	26203-080602	BOLT, M8X 60 PLATED		2	2		2	2		
18	1	22213-080000	WASHER, SPRING 8		4	4		4	4		
19	1	43530-500610	JOINT, PIPE 30A	1	1	1	1	1	1		
20	1	43662-030030	COCK ASSY, KINGSTON	1	1	1	1	1	1		
21	1	119773-42520	GEAR, PUMP	1	1	1	1	1	1		
22	1	22117-100000	WASHER, 10	2	2	2	2	2	2		
23	1	22217-100000	WASHER, SPRING 10	2	2	2	2	2	2		
25	1	119770-90820	STUD, D8XL34	2	2	2	2	2	2		

N:Old $\xleftarrow[\text{No}]{\text{Yes}}$ New, Q:Old $\xleftarrow[\text{Yes}]{\text{No}}$ New, R:Old $\xleftarrow[\text{Yes}]{\text{Yes}}$ New, S:Old $\xleftarrow[\text{No}]{\text{No}}$ New, W:Add, Z:Discontinued, F:Interchangeable by set, K:Q'ty Change

Copyright (C) YANMAR CO., LTD. All RightsReserved.

Fig.32. COOLING FRESH WATER PUMP

Y00R5420

Fig.32 冷却水ポンプ（清水）
COOLING FRESH WATER PUMP

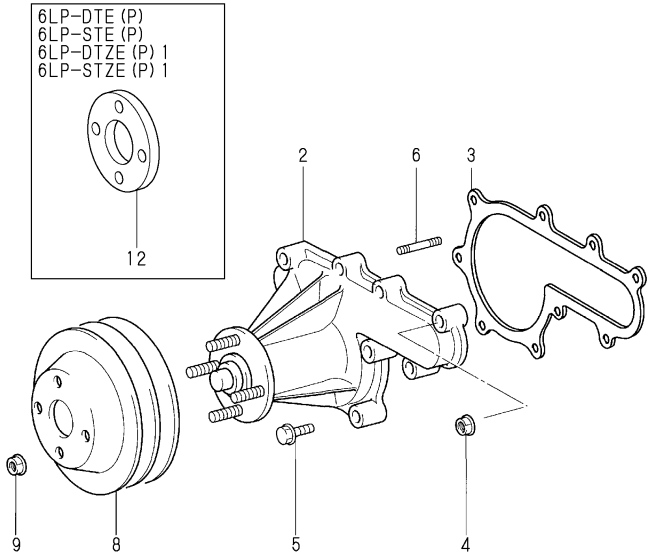

(A)=6LP(A)-DTE(P (D)=6LP(A)-STE(P
(B)=6LP(A-DTZE(P (E)=6LP(A-STZE(P
(C)=6LP(A-DTZEP1 (F)=6LP(A-STZEP1

No.	Lev.	Parts No.	Description	Q'ty (A)	(B)	(C)	(D)	(E)	(F)	I	R
2	2	119770-00730	PUMP ASSY, WATER	1	1	1	1	1	1		
3	2	119770-00740	GASKET	1	1	1	1	1	1		
4	2	119770-90630	NUT	2	2	2	2	2	2		
5	2	119770-90800	BOLT	5	5	5	5	5	5		
6	2	119770-90810	STUD	2	2	2	2	2	2		
8	2	119770-00750	PULLEY	1	1	1	1	1	1		
9	2	119770-90630	NUT	4	4	4	4	4	4		
12	1	119773-43350	SPACER	1		1	1		1		

N:Old ◄Yes/No► New, Q:Old ◄No/Yes► New, R:Old ◄Yes/Yes► New, S:Old ◄No/No► New, W:Add, Z:Discontinued, F:Interchangeable by set, K:Q'ty Change

Copyright (C) YANMAR CO., LTD. All RightsReserved.

Fig.33. THERMOSTAT

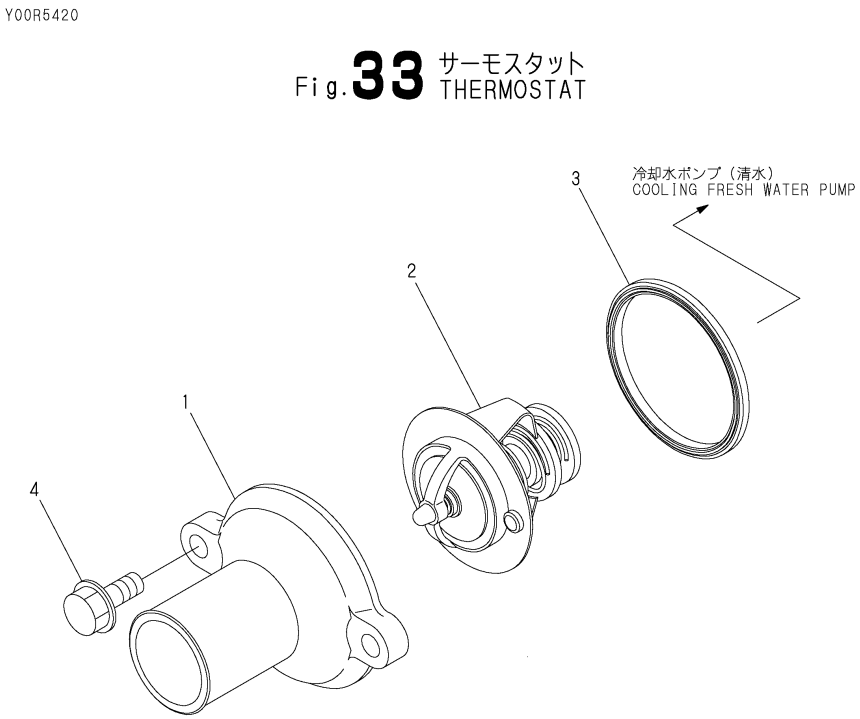

(A)=6LP(A)-DTE(P (D)=6LP(A)-STE(P
(B)=6LP(A-DTZE(P (E)=6LP(A-STZE(P
(C)=6LP(A-DTZEP1 (F)=6LP(A-STZEP1

No.	Lev.	Parts No.	Description	Q'ty (A)	(B)	(C)	(D)	(E)	(F)	I	R
1	1	119773-49540	COVER, THERMOSTAT	1	1	1	1	1	1		
2	1	119773-49550	THERMOSTAT	1	1	1	1	1	1		
3	1	119773-49570	GASKET	1	1	1	1	1	1		
4	1	26106-080202	BOLT, M8X 20 PLATED	2	2	2	2	2	2		

N:Old $\overset{\text{Yes}}{\underset{\text{No}}{\leftrightarrows}}$ New, Q:Old $\overset{\text{No}}{\underset{\text{Yes}}{\leftrightarrows}}$ New, R:Old $\overset{\text{Yes}}{\underset{\text{Yes}}{\leftrightarrows}}$ New, S:Old $\overset{\text{No}}{\underset{\text{No}}{\leftrightarrows}}$ New, W:Add, Z:Discontinued, F:Interchangeable by set, K:Q'ty Change

Copyright (C) YANMAR CO., LTD. All RightsReserved.

Fig.34. COOLING FRESH WATER COOLER

Y00R5420

Fig.34 清水クーラ
COOLING FRESH WATER COOLER

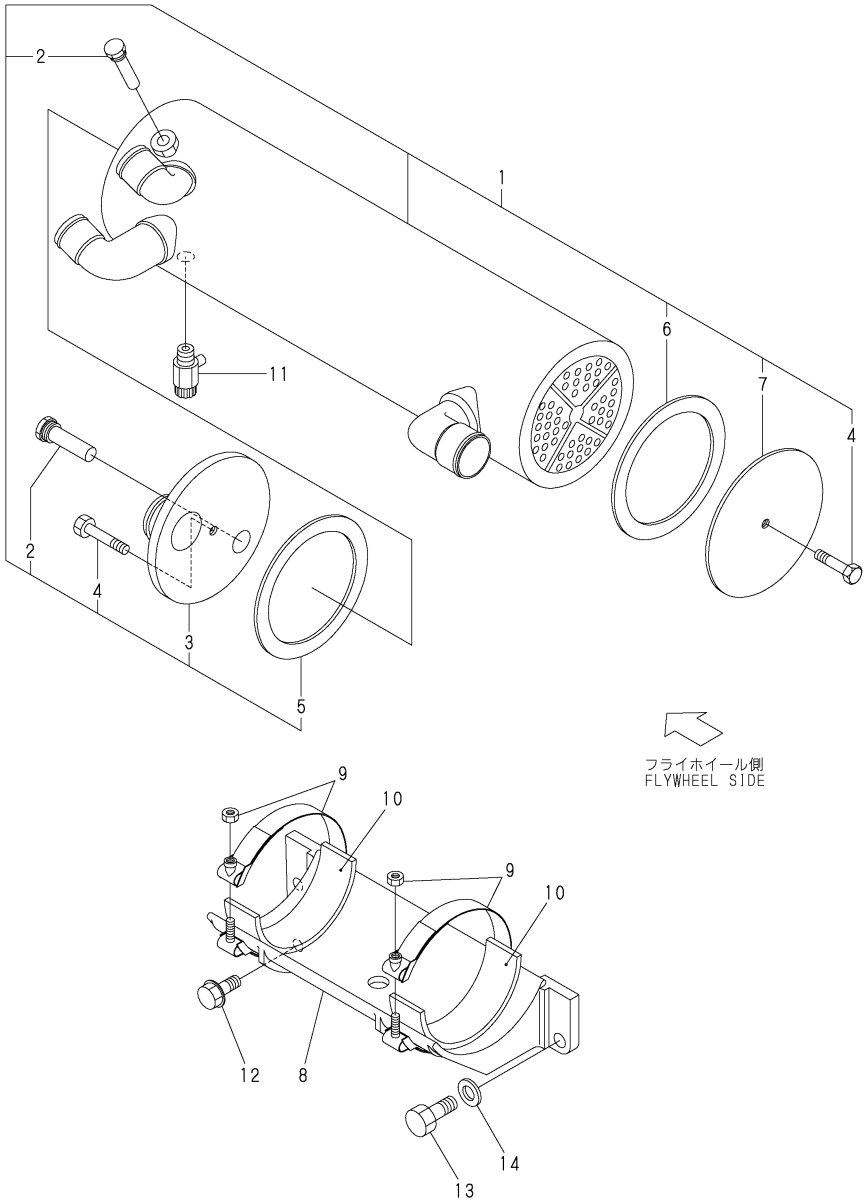

(A)=6LP(A)-DTE(P (D)=6LP(A)-STE(P
(B)=6LP(A-DTZE(P (E)=6LP(A-STZE(P
(C)=6LP(A-DTZEP1 (F)=6LP(A-STZEP1

No.	Lev.	Parts No.	Description	Q'ty (A)	(B)	(C)	(D)	(E)	(F)	I	R
1	1	119773-44010	COOLER ASSY, WATER	1	1	1	1	1	1		
2	2	119574-44150	ZINC, ANTI-CORROSIVE	2	2	2	2	2	2		
3	2	119773-44050	COVER ASSY	1	1	1	1	1	1		
4	2	119574-44180	BOLT, UNC 3/8	2	2	2	2	2	2		
5	2	119773-44070	GASKET	1	1	1	1	1	1		
6	2	119773-44080	GASKET	1	1	1	1	1	1		
7	2	119773-44060	COVER	1	1	1	1	1	1		
8	1	119773-44150	BRACKET	1	1	1	1	1	1		
9	1	119574-44600	CLAMP, BOLT	2	2	2	2	2	2		
10	1	119574-44621	SEAT, RUBBER	2	2	2	2	2	2		
11	1	119620-49290	COCK ASSY, 1/4	1	1	1	1	1	1		
12	1	26136-100252	BOLT, M10X 25 PLATED	2	2	2	2	2	2		
13	1	26156-120302	BOLT, M12X 30 PLATED	1	1	1	1	1	1		
14	1	22117-120000	WASHER, 12	1	1	1	1	1	1		

N:Old $\xleftrightarrow[\text{No}]{\text{Yes}}$ New, Q:Old $\xleftrightarrow[\text{Yes}]{\text{No}}$ New, R:Old $\xleftrightarrow[\text{Yes}]{\text{Yes}}$ New, S:Old $\xleftrightarrow[\text{No}]{\text{No}}$ New, W:Add, Z:Discontinued, F:Interchangeable by set, K:Q'ty Change

Copyright (C) YANMAR CO., LTD. All RightsReserved.

Fig.35. COOLING SEA WATER PIPE(6LP-DTE(P))

P/C NEWS No:Y00R5420-5
PUBLISHED:2006/6

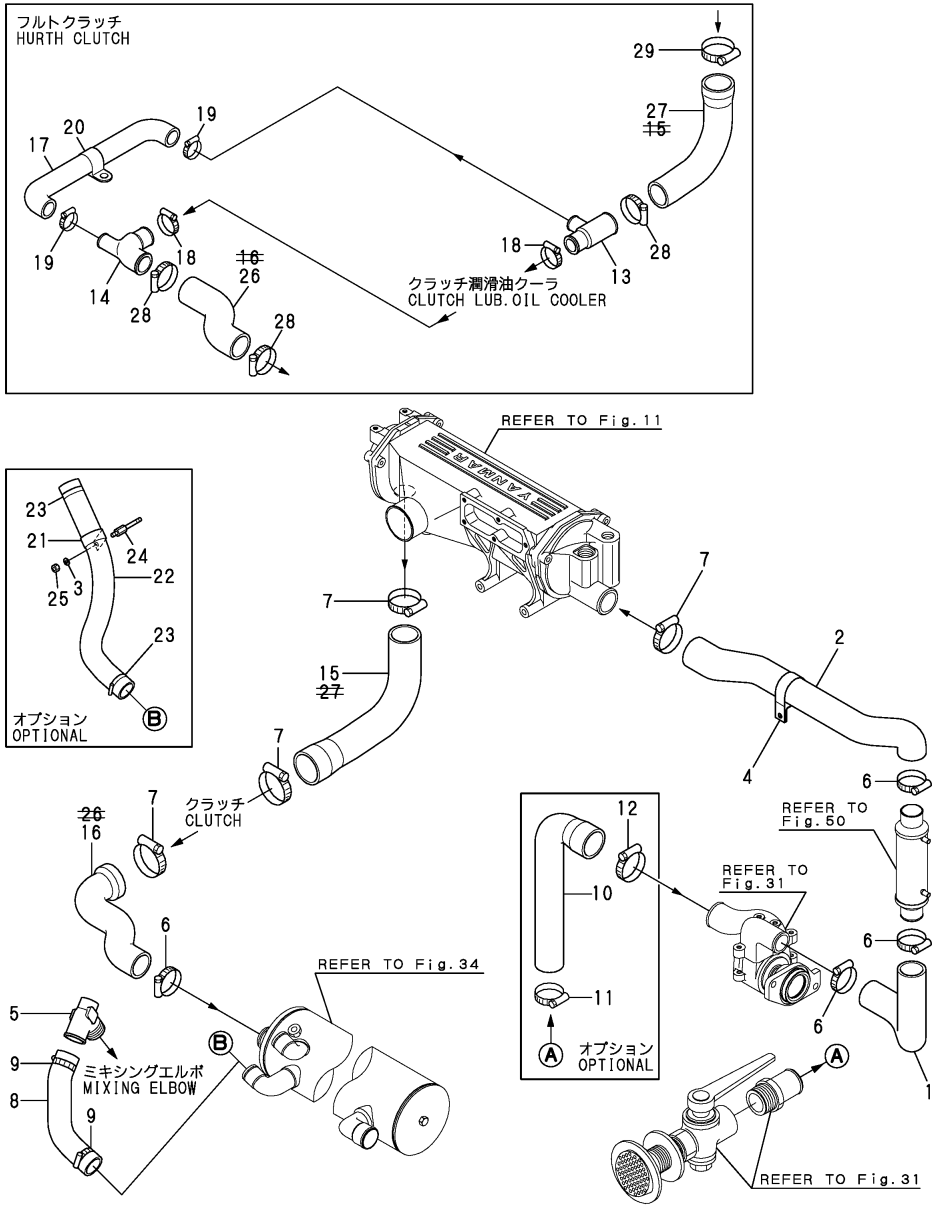

(A)=6LP(A)-DTE(P (D)=6LP(A)-STE(P
(B)=6LP(A-DTZE(P (E)=6LP(A-STZE(P
(C)=6LP(A-DTZEP1 (F)=6LP(A-STZEP1

No.	Lev.	Parts No.	Description	Q'ty (A)	(B)	(C)	(D)	(E)	(F)	I	R
1	1	119775-49010	PIPE, WATER	1							
2	1	119775-49040	HOSE	1							
3	1	22117-080000	WASHER, 8	1							
4	1	119593-49080	BAND	1							
5	1	119775-48640	JOINT	1							
6	1	23000-054000	CLAMP, 54	4							
6-1	1	119172-48480	CLIP, HOSE 48	4						N	
	(A=*2002.03)										
7	1	23000-060000	CLAMP, 60	4							
7-1	1	119172-48540	CLIP, HOSE 54	4						N	
	(A=*2002.03)										
8	1	119775-49750	PIPE, WATER	1							
9	1	23000-054000	CLAMP, 54	2							
9-1	1	119172-48480	CLIP, HOSE 48	2						N	
	(A=*2002.03)										
10	1	119775-49160	PIPE, WATER	1							
11	1	23000-054000	CLAMP, 54	1							
11-1	1	119172-48540	CLIP, HOSE 54	1						N	
	(A=*2002.03)										
12	1	23000-060000	CLAMP, 60	1							
12-1	1	119172-48540	CLIP, HOSE 54	1						N	
	(A=*2002.03)										
13	1	119773-49360	JOINT	1							1
14	1	119773-49370	JOINT	1							1
15	1	119775-49030	HOSE, WATER	1							
16	1	119775-49080	HOSE, WATER	1							
17	1	119773-49090	PIPE, WATER	1							1
18	1	23000-048000	CLAMP, 48	2							1
18-1	1	119172-48480	CLIP, HOSE 48	2						N	1
	(A=*2002.03)										
19	1	23000-041000	CLAMP, 41	2							1
19-1	1	119172-48410	CLIP, HOSE 41	2						N	1
	(A=*2002.03)										
20	1	23297-350121	CLAMP, A35X12	1							
21	1	119593-49080	BAND	1							
22	1	119778-49780	PIPE, WATER	1							
23	1	23000-054000	CLAMP, 54	2							
23-1	1	119172-48540	CLIP, HOSE 54	2						N	
	(A=*2002.03)										
24	1	119778-49800	BOLT	1							
25	1	26716-080002	NUT, M8	1							
26	1	119773-49030	HOSE, WATER	1							1
27	1	119773-49020	HOSE, WATER	1							1
28	1	23000-054000	CLAMP, 54	3							1
28-1	1	119172-48480	CLIP, HOSE 48	3						N	1
	(A=*2002.03)										
29	1	23000-060000	CLAMP, 60	1							1
29-1	1	119172-48540	CLIP, HOSE 54	1						N	1
	(A=*2002.03)										

Remarks
(1)HURTH CLUTCH LUB.OIL COOLER

N:Old $\overset{\text{Yes}}{\underset{\text{No}}{\leftrightarrow}}$ New, Q:Old $\overset{\text{No}}{\underset{\text{Yes}}{\leftrightarrow}}$ New, R:Old $\overset{\text{Yes}}{\underset{\text{Yes}}{\leftrightarrow}}$ New, S:Old $\overset{\text{No}}{\underset{\text{No}}{\leftrightarrow}}$ New, W:Add, Z:Discontinued, F:Interchangeable by set, K:Q'ty Change

Copyright (C) YANMAR CO., LTD. All RightsReserved.

Fig.36. COOLING SEA WATER PIPE(6LP-DTZE(P)1)

(A)=6LP(A)-DTE(P
(B)=6LP(A-DTZE(P
(C)=6LP(A-DTZEP1
(D)=6LP(A)-STE(P
(E)=6LP(A-STZE(P
(F)=6LP(A-STZEP1

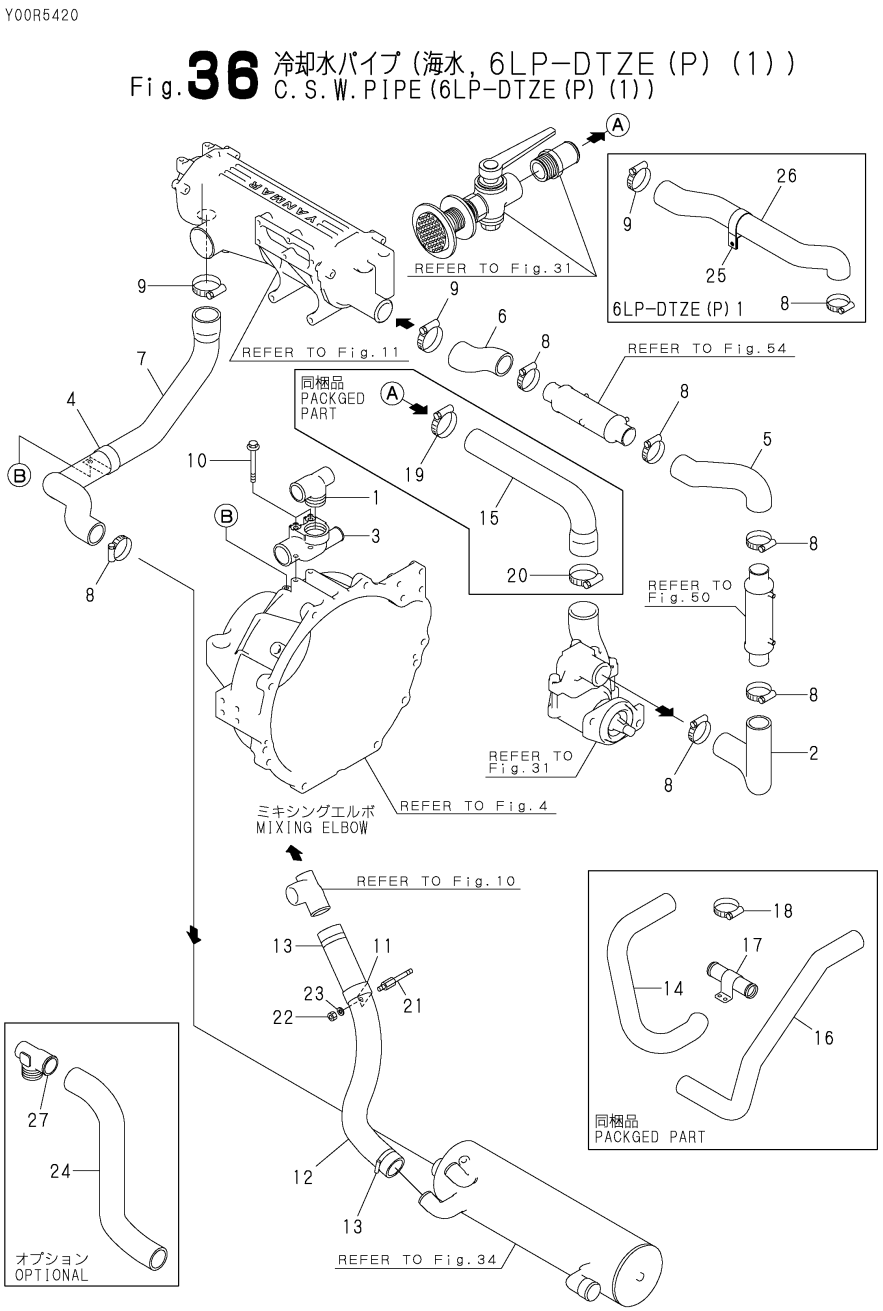

No.	Lev.	Parts No.	Description	Q'ty (A)	(B)	(C)	(D)	(E)	(F)	I	R
1	1	119775-48640	JOINT		1	1					
2	1	119775-49010	PIPE, WATER		1	1					
3	1	119779-49050	JOINT, 3-WAY		1	1					
4	1	119593-49080	BAND		1	1					
5	1	119779-49090	PIPE, WATER		1						
6	1	119779-49100	PIPE, WATER		1						
7	1	119779-49570	PIPE, WATER		1	1					
8	1	23000-054000	CLAMP, 54		6	6					
9	1	23000-060000	CLAMP, 60		2	2					
10	1	26106-100802	BOLT, M10X 80 PLATED		2	2					
11	1	119593-49080	BAND		1	1					
12	1	119778-49780	PIPE, WATER		1	1					
13	1	23000-054000	CLAMP, 54		2	2					
14	1	119779-49150	HOSE, DRIVE		1	1					
15	1	119775-49160	PIPE, WATER		1	1					
16	1	119779-49170	HOSE		1	1					
17	1	119778-49200	JOINT		1	1					
18	1	23000-041000	CLAMP, 41		4	4					
19	1	23000-054000	CLAMP, 54		1	1					
20	1	23000-060000	CLAMP, 60		1	1					
21	1	119778-49800	BOLT		1	1					
22	1	26716-080002	NUT, M8		1	1					
23	1	22117-080000	WASHER, 8		1	1					
24	1	119779-49040	HOSE, MIXING		1	1					
25	1	119593-49080	BAND			1					
26	1	119775-49040	HOSE			1					
27	1	119778-48620	JOINT		1	1					

N:Old ◄Yes/No► New, Q:Old ◄No/Yes► New, R:Old ◄Yes/Yes► New, S:Old ◄No/No► New, W:Add, Z:Discontinued, F:Interchangeable by set, K:Q'ty Change

Copyright (C) YANMAR CO., LTD. All RightsReserved.

Fig.37. COOLING SEA WATER PIPE(6LP-STE(P))

P/C NEWS No:Y00R5420-5
PUBLISHED:2006/6

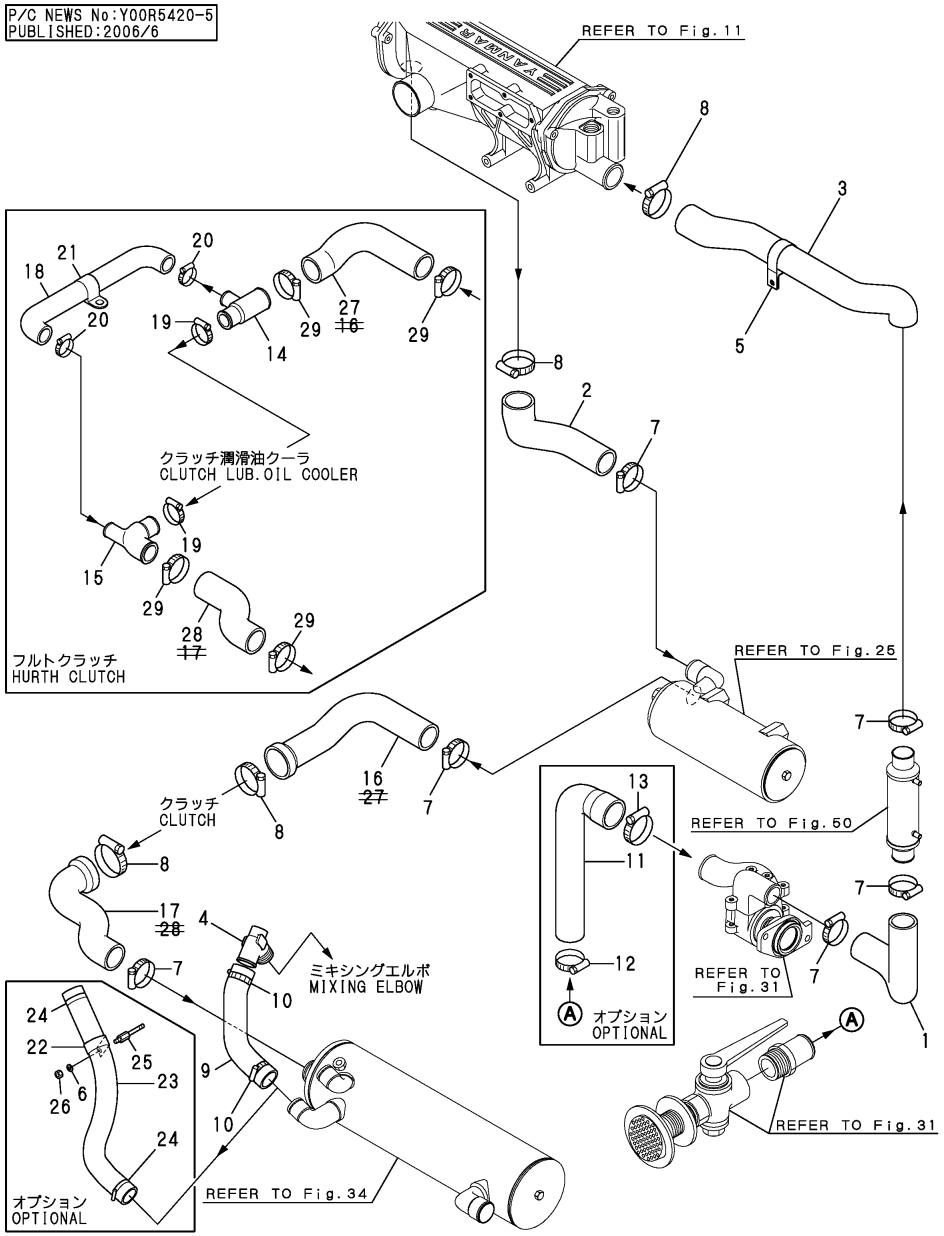

(A)=6LP(A)-DTE(P (D)=6LP(A)-STE(P
(B)=6LP(A-DTZE(P (E)=6LP(A-STZE(P
(C)=6LP(A-DTZEP1 (F)=6LP(A-STZEP1

No.	Lev.	Parts No.	Description	Q'ty (A)	(B)	(C)	(D)	(E)	(F)	I	R
1	1	119775-49010	PIPE, WATER				1				
2	1	119775-49060	HOSE, COOLER				1				
3	1	119775-49040	HOSE				1				
4	1	119775-48640	JOINT				1				
5	1	119593-49080	BAND				1				
6	1	22117-080000	WASHER, 8				1				
7	1	23000-054000	CLAMP, 54				6				
7-1	1	119172-48480	CLIP, HOSE 48				6			N	
			(D=*2002.03)								
8	1	23000-060000	CLAMP, 60				4				
8-1	1	119172-48540	CLIP, HOSE 54				4			N	
			(D=*2002.03)								
9	1	119775-49750	PIPE, WATER				1				
10	1	23000-054000	CLAMP, 54				2				
10-1	1	119172-48480	CLIP, HOSE 48				2			N	
			(D=*2002.03)								
11	1	119775-49160	PIPE, WATER				1				
12	1	23000-054000	CLAMP, 54				1				
12-1	1	119172-48540	CLIP, HOSE 54				1			N	
			(D=*2002.03)								
13	1	23000-060000	CLAMP, 60				1				
13-1	1	119172-48540	CLIP, HOSE 54				1			N	
			(D=*2002.03)								
14	1	119773-49360	JOINT				1				1
15	1	119773-49370	JOINT				1				1
16	1	119775-49090	HOSE				1				
17	1	119775-49080	HOSE, WATER				1				
18	1	119773-49090	PIPE, WATER				1				1
19	1	23000-048000	CLAMP, 48				2				1
19-1	1	119172-48480	CLIP, HOSE 48				2			N	1
			(D=*2002.03)								
20	1	23000-041000	CLAMP, 41				2				1
20-1	1	119172-48410	CLIP, HOSE 41				2			N	1
			(D=*2002.03)								
21	1	23297-350121	CLAMP, A35X12				2				
22	1	119593-49080	BAND				1				
23	1	119778-49780	PIPE, WATER				1				
24	1	23000-054000	CLAMP, 54				2				
24-1	1	119172-48540	CLIP, HOSE 54				2			N	
			(D=*2002.03)								
25	1	119778-49800	BOLT				1				
26	1	26716-080002	NUT, M8				1				
27	1	119775-49020	HOSE				1				1
28	1	119773-49030	HOSE, WATER				1				1
29	1	23000-054000	CLAMP, 54				4				1
29-1	1	119172-48480	CLIP, HOSE 48				4			N	1
			(D=*2002.03)								

Remarks
(1)HURTH CLUTCH LUB.OIL COOLER

N:Old $\xleftrightarrow[\text{No}]{\text{Yes}}$ New, Q:Old $\xleftrightarrow[\text{Yes}]{\text{No}}$ New, R:Old $\xleftrightarrow[\text{Yes}]{\text{Yes}}$ New, S:Old $\xleftrightarrow[\text{No}]{\text{No}}$ New, W:Add, Z:Discontinued, F:Interchangeable by set, K:Q'ty Change

Copyright (C) YANMAR CO., LTD. All RightsReserved.

Fig.38. COOLING SEA WATER PIPE(6LP-STZE(P)1)

(A)=6LP(A)-DTE(P
(B)=6LP(A-DTZE(P
(C)=6LP(A-DTZEP1
(D)=6LP(A)-STE(P
(E)=6LP(A-STZE(P
(F)=6LP(A-STZEP1

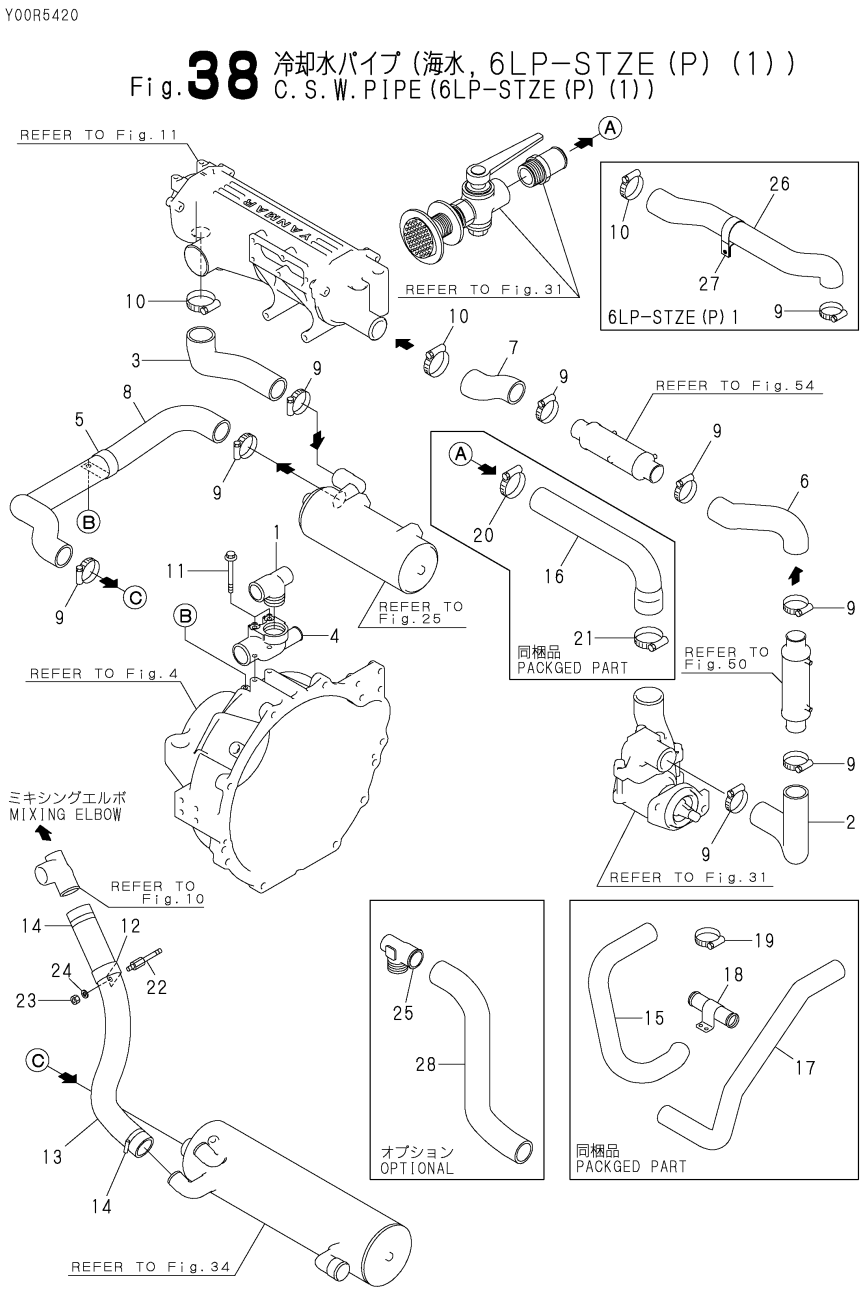

No.	Lev.	Parts No.	Description	Q'ty (A)	(B)	(C)	(D)	(E)	(F)	I	R
1	1	119775-48640	JOINT					1	1		
2	1	119775-49010	PIPE, WATER					1	1		
3	1	119775-49060	HOSE, COOLER					1	1		
4	1	119779-49050	JOINT, 3-WAY					1	1		
5	1	119593-49080	BAND					1	1		
6	1	119779-49090	PIPE, WATER					1			
7	1	119779-49100	PIPE, WATER					1			
8	1	119779-49590	PIPE, WATER					1	1		
9	1	23000-054000	CLAMP, 54					8	8		
10	1	23000-060000	CLAMP, 60					2	2		
11	1	26106-100802	BOLT, M10X 80 PLATED					2	2		
12	1	119593-49080	BAND					1	1		
13	1	119778-49780	PIPE, WATER					1	1		
14	1	23000-054000	CLAMP, 54					2	2		
15	1	119779-49150	HOSE, DRIVE					1	1		
16	1	119775-49160	PIPE, WATER					1	1		
17	1	119779-49170	HOSE					1	1		
18	1	119778-49200	JOINT					1	1		
19	1	23000-041000	CLAMP, 41					4	4		
20	1	23000-054000	CLAMP, 54					1	1		
21	1	23000-060000	CLAMP, 60					1	1		
22	1	119778-49800	BOLT					1	1		
23	1	26716-080002	NUT, M8					1	1		
24	1	22117-080000	WASHER, 8					1	1		
25	1	119778-48620	JOINT					1	1		
26	1	119775-49040	HOSE						1		
27	1	119593-49080	BAND						1		
28	1	119779-49040	HOSE, MIXING					1	1		

N:Old $\xleftrightarrow[\text{No}]{\text{Yes}}$ New, Q:Old $\xleftrightarrow[\text{Yes}]{\text{No}}$ New, R:Old $\xleftrightarrow[\text{Yes}]{\text{Yes}}$ New, S:Old $\xleftrightarrow[\text{No}]{\text{No}}$ New, W:Add, Z:Discontinued, F:Interchangeable by set, K:Q'ty Change

Copyright (C) YANMAR CO., LTD. All RightsReserved.

Fig.39. COOLING FRESH WATER PIPE

Y00R5420

Fig.39 冷却水パイプ（清水）
COOLING FRESH WATER PIPE

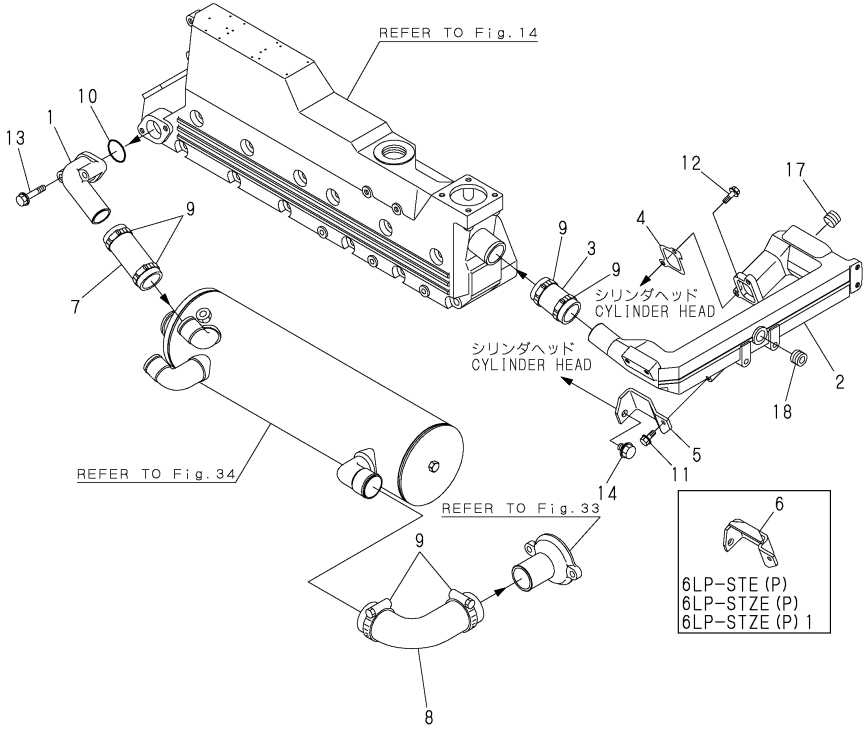

(A)=6LP(A)-DTE(P (D)=6LP(A)-STE(P
(B)=6LP(A-DTZE(P (E)=6LP(A-STZE(P
(C)=6LP(A-DTZEP1 (F)=6LP(A-STZEP1

No.	Lev.	Parts No.	Description	Q'ty (A)	(B)	(C)	(D)	(E)	(F)	I	R
1	1	119773-44450	JOINT	1	1	1	1	1	1		
2	1	119773-49110	PIPE, WATER	1	1	1	1	1	1		
3	1	119775-49120	JOINT, RUBBER	1	1	1	1	1	1		
4	1	119773-49140	GASKET	1	1	1	1	1	1		
5	1	119773-49150	BRACKET	1	1	1					
6	1	119775-49150	BRACKET				1	1	1		
7	1	119775-49200	JOINT, RUBBER	1	1	1					
7A	1	119773-49200	JOINT, MANIFOLD	1	1	1	1	1	1		
8	1	119775-49220	JOINT	1	1	1	1	1	1		
9	1	23000-054000	CLAMP, 54	6	6	6	6	6	6		
10	1	24321-000350	O-RING, 1AG35.0	1	1	1	1	1	1		
11	1	26106-080162	BOLT, M8X 16 PLATED	1	1	1	1	1	1		
12	1	26106-080202	BOLT, M8X 20 PLATED	2	2	2	2	2	2		
13	1	26106-080502	BOLT, M8X 50 PLATED	2	2	2	2	2	2		
14	1	26136-100252	BOLT, M10X 25 PLATED	1	1	1					
17	1	23876-030000	PLUG, R03	1	1	1	1	1	1		
18	1	23871-030000	PLUG, R03	1	1	1	1	1	1		

N:Old ←Yes/No→ New, Q:Old ←No/Yes→ New, R:Old ←Yes/Yes→ New, S:Old ←No/No→ New, W:Add, Z:Discontinued, F:Interchangeable by set, K:Q'ty Change

Copyright (C) YANMAR CO., LTD. All RightsReserved.

Fig.40. COOLING FRESH WATER WATER PIPE(TURBINE)

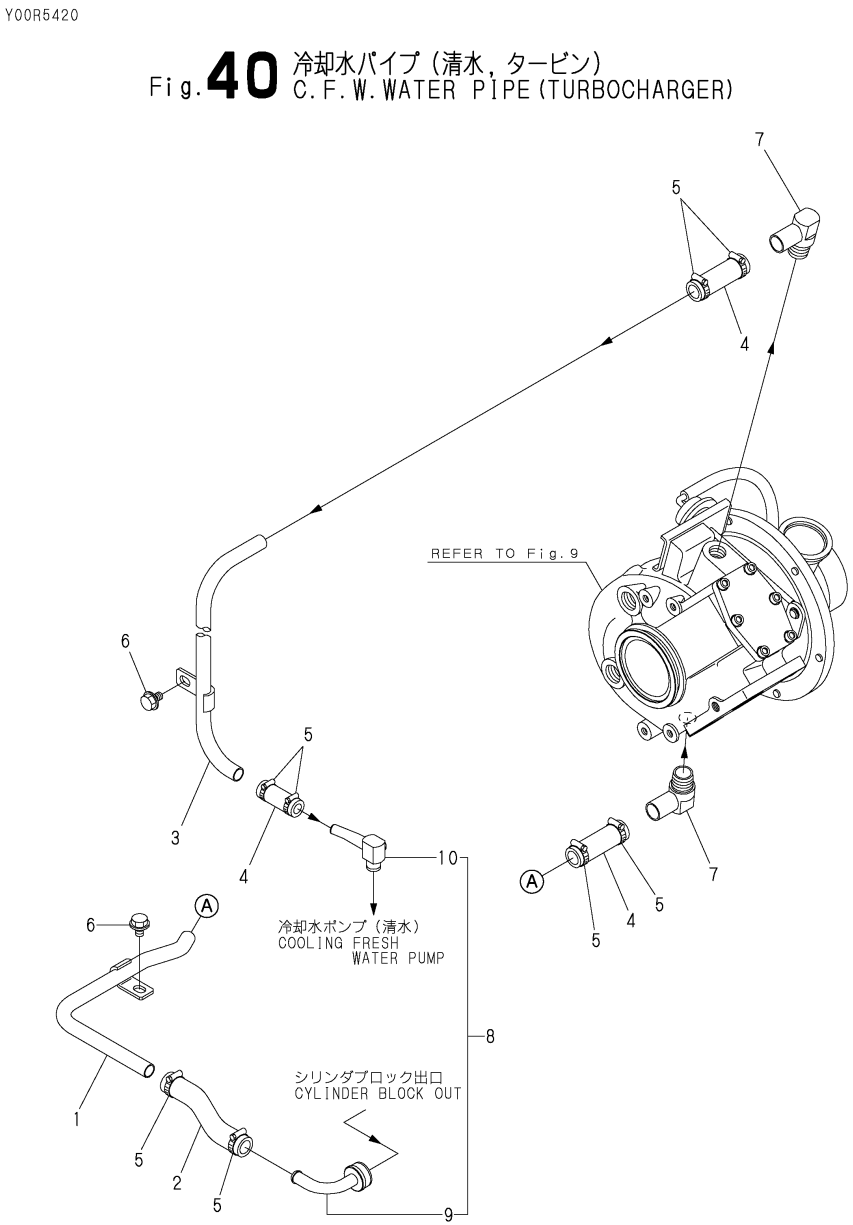

(A)=6LP(A)-DTE(P (D)=6LP(A)-STE(P
(B)=6LP(A-DTZE(P (E)=6LP(A-STZE(P
(C)=6LP(A-DTZEP1 (F)=6LP(A-STZEP1

No.	Lev.	Parts No.	Description	Q'ty (A)	(B)	(C)	(D)	(E)	(F)	I	R
1	1	119773-49250	PIPE, WATER	1	1	1	1	1	1		
2	1	119775-49260	HOSE	1	1	1	1	1	1		
3	1	119773-49280	HOSE ASSY, TURBINE	1	1	1	1	1	1		
4	1	119773-49340	JOINT	3	3	3	3	3	3		
5	1	23000-022000	CLAMP, 22	8	8	8	8	8	8		
6	1	26106-080122	BOLT, M8X 12 PLATED	2	2	2	2	2	2		
7	1	119187-49321	JOINT	2	2	2	2	2	2		
8	1	119773-49990	PIPE, WATER	1	1	1	1	1	1		
9	2	119773-49300	JOINT	1	1	1	1	1	1		
10	2	119773-49320	JOINT	1	1	1	1	1	1		

N:Old $\xleftrightarrow[\text{No}]{\text{Yes}}$ New, Q:Old $\xleftrightarrow[\text{Yes}]{\text{No}}$ New, R:Old $\xleftrightarrow[\text{Yes}]{\text{Yes}}$ New, S:Old $\xleftrightarrow[\text{No}]{\text{No}}$ New, W:Add, Z:Discontinued, F:Interchangeable by set, K:Q'ty Change

Copyright (C) YANMAR CO., LTD. All RightsReserved.

Fig.41. BILGE PUMP(STD,OPTIONAL)

(A)=6LP(A)-DTE(P (D)=6LP(A)-STE(P
(B)=6LP(A-DTZE(P (E)=6LP(A-STZE(P
(C)=6LP(A-DTZEP1 (F)=6LP(A-STZEP1

Y00R5420

Fig.41 ビルジポンプ（STD，オプション）
BILGE PUMP(STD,OPTIONAL)

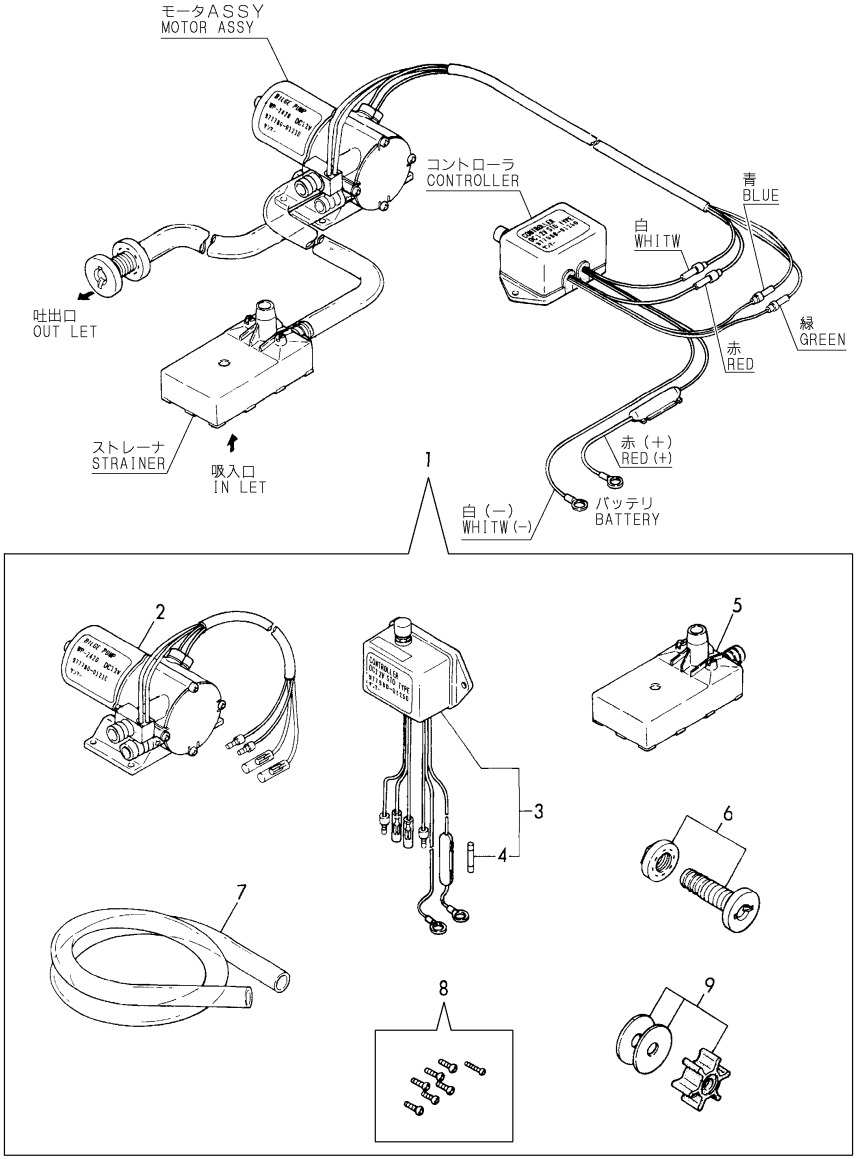

No.	Lev.	Parts No.	Description	Q'ty (A)	(B)	(C)	(D)	(E)	(F)	I	R
1	1	977780-01210	PUMP(12V).BILGE	1	1	1	1	1	1		
2	2	977780-01230	MOTOR ASSY(BILG PUMP	1	1	1	1	1	1		
3	2	977780-01250	CONTROLLER	1	1	1	1	1	1		
4	3	X8636008003	FUSE	1	1	1	1	1	1		
5	2	X179100021X	STRAINER	1	1	1	1	1	1		
6	2	X179100100X	PIPE ASSY	1	1	1	1	1	1		
7	2	X0044021509	HOSE A	1	1	1	1	1	1		
8	2	X199903800X	SCREW KIT	1	1	1	1	1	1		
9	2	977780-03000	INPELLER	1	1	1	1	1	1		

N:Old $\xleftarrow[\text{No}]{\text{Yes}}$ New, Q:Old $\xleftarrow[\text{Yes}]{\text{No}}$ New, R:Old $\xleftarrow[\text{Yes}]{\text{Yes}}$ New, S:Old $\xleftarrow[\text{No}]{\text{No}}$ New, W:Add, Z:Discontinued, F:Interchangeable by set, K:Q'ty Change

Copyright (C) YANMAR CO., LTD. All RightsReserved.

Fig.42. BILGE PUMP(DX,OPTIONAL)

(A)=6LP(A)-DTE(P (D)=6LP(A)-STE(P
(B)=6LP(A-DTZE(P (E)=6LP(A-STZE(P
(C)=6LP(A-DTZEP1 (F)=6LP(A-STZEP1

Y00R5420

Fig.42 ビルジポンプ（DX，オプション）
BILGE PUMP(DX,OPTIONAL)

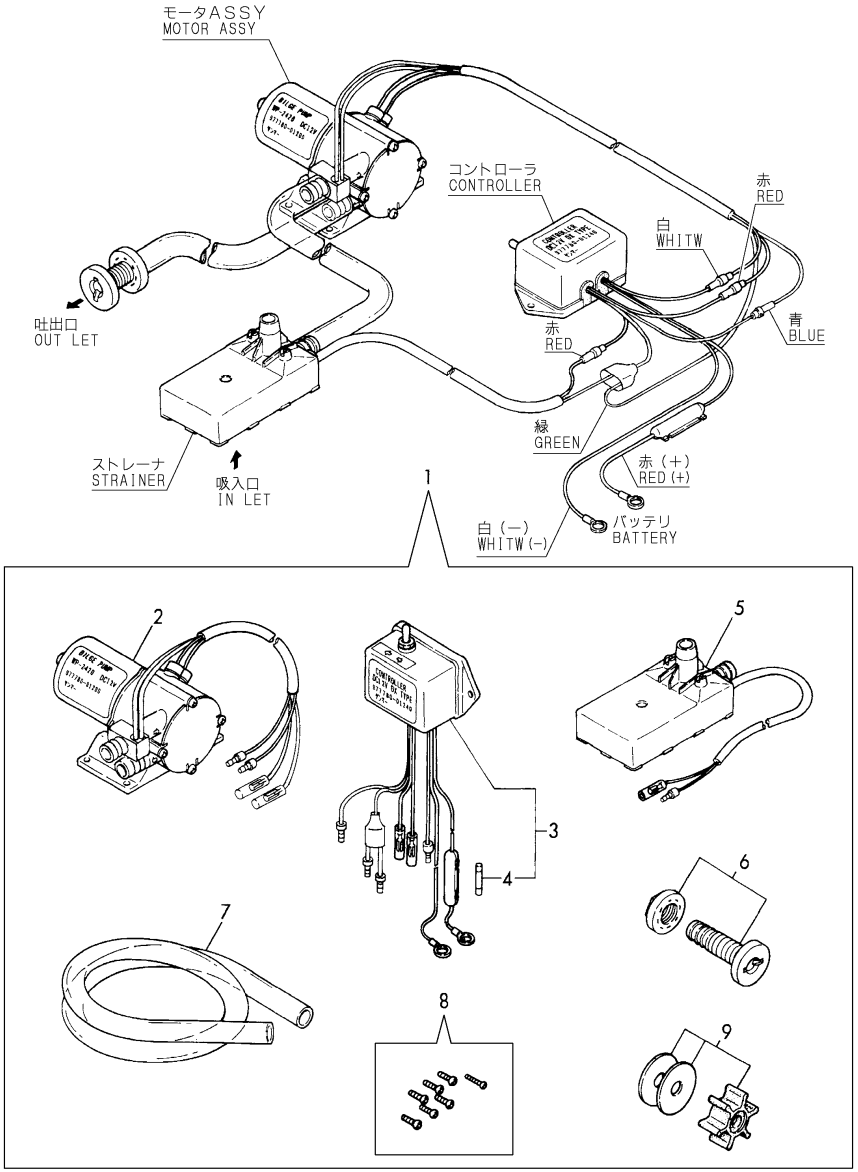

No.	Lev.	Parts No.	Description	Q'ty (A)	(B)	(C)	(D)	(E)	(F)	I	R
1	1	977780-01200	PUMP(12V).BILGE	1	1	1	1	1	1		
2	2	977780-01230	MOTOR ASSY(BILG PUMP	1	1	1	1	1	1		
3	2	977780-01240	CONTROLLER	1	1	1	1	1	1		
4	3	X8636008003	FUSE	1	1	1	1	1	1		
5	2	X179100011X	STRAINER	1	1	1	1	1	1		
6	2	X179100100X	PIPE ASSY	1	1	1	1	1	1		
7	2	X0044021509	HOSE A	1	1	1	1	1	1		
8	2	X199903800X	SCREW KIT	1	1	1	1	1	1		
9	2	977780-03000	INPELLER	1	1	1	1	1	1		

N:Old ←Yes/No→ New, Q:Old ←No/Yes→ New, R:Old ←Yes/Yes→ New, S:Old ←No/No→ New, W:Add, Z:Discontinued, F:Interchangeable by set, K:Q'ty Change

Copyright (C) YANMAR CO., LTD. All RightsReserved.

Fig.43. FUEL INJECTION PUMP

(A)=6LP(A)-DTE(P
(B)=6LP(A-DTZE(P
(C)=6LP(A-DTZEP1
(D)=6LP(A)-STE(P
(E)=6LP(A-STZE(P
(F)=6LP(A-STZEP1

Y00R5420

Fig.43 燃料噴射ポンプ
FUEL INJECTION PUMP

6LP-DTE(P)
6LP-DTZE(P)
6LP-DTZE(P)1

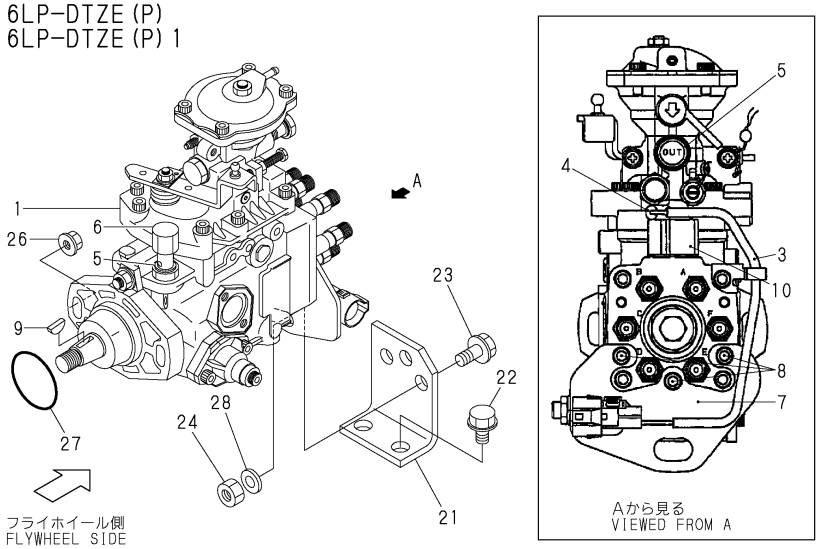

6LP-STE(P)
6LP-STZE(P)
6LP-STZE(P)1

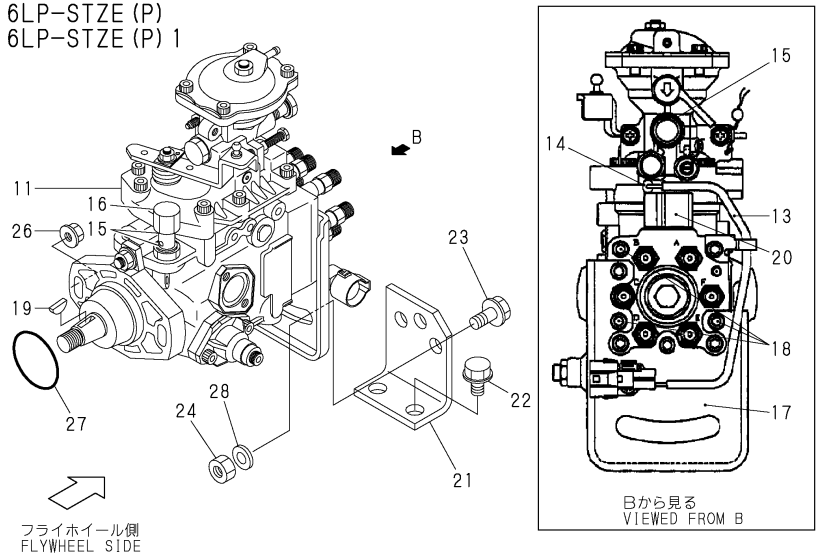

No.	Lev.	Parts No.	Description	Q'ty (A)	(B)	(C)	(D)	(E)	(F)	I	R
1	1	119773-51990	PUMP ASSY, INJECTION	1	1	1					
3	2	119773-51910	WIRE ASSY	1	1	1					
4	2	119773-51920	NUT	1	1	1					
5	2	119773-51930	WASHER	4	4	4					
6	2	119773-51940	NUT, CAP	1	1	1					
7	2	119773-51950	BRACKET	1	1	1					
8	2	119773-51960	BOLT	3	3	3					
9	2	119773-51970	KEY	1	1	1					
10	2	119773-51980	SOLENOID	1	1	1					
11	1	119775-51990	PUMP ASSY, INJECTION				1	1	1		
13	2	119773-51910	WIRE ASSY				1	1	1		
14	2	119773-51920	NUT				1	1	1		
15	2	119773-51930	WASHER				4	4	4		
16	2	119773-51940	NUT, CAP				1	1	1		
17	2	119775-51950	BRACKET				1	1	1		
18	2	119773-51960	BOLT				4	4	4		
19	2	119773-51970	KEY				1	1	1		
20	2	119773-51980	SOLENOID				1	1	1		
21	1	119773-51810	BRACKET	1	1	1	1	1	1		
22	1	26106-120202	BOLT, M12X 20 PLATED	2	2	2	2	2	2		
23	1	26106-120252	BOLT, M12X 25 PLATED	1	1	1	2	2	2		
24	1	26716-120002	NUT, M12	1	1	1	2	2	2		
26	1	119770-90890	NUT	2	2	2	2	2	2		
27	1	119770-90900	O-RING	1	1	1	1	1	1		
28	1	22117-120000	WASHER, 12	1	1	1	2	2	2		

N:Old $\xleftarrow[\text{No}]{\text{Yes}}$ New, Q:Old $\xleftarrow[\text{Yes}]{\text{No}}$ New, R:Old $\xleftarrow[\text{Yes}]{\text{Yes}}$ New, S:Old $\xleftarrow[\text{No}]{\text{No}}$ New, W:Add, Z:Discontinued, F:Interchangeable by set, K:Q'ty Change

Copyright (C) YANMAR CO., LTD. All RightsReserved.

Fig.44. FUEL INJECTION VALVE (6LP-DT(Z)E(P)1)

Y00R5420

Fig.44 燃料噴射弁(6LP-DT(Z)E(P)(1))
FUEL INJECTION VALVE (6LP-DT(Z)E(P)(1))

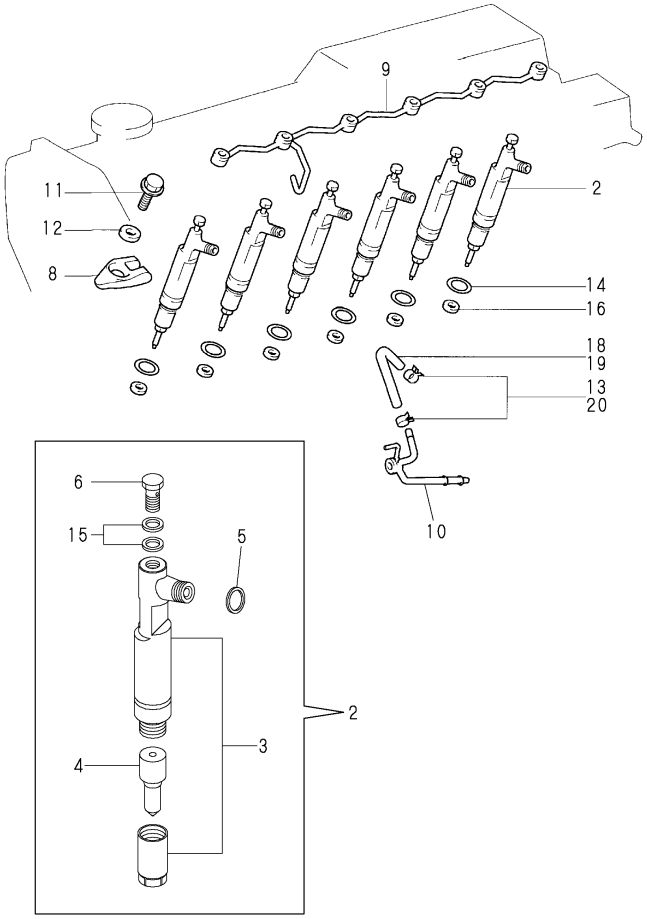

(A)=6LP(A)-DTE(P (D)=6LP(A)-STE(P
(B)=6LP(A-DTZE(P (E)=6LP(A-STZE(P
(C)=6LP(A-DTZEP1 (F)=6LP(A-STZEP1

No.	Lev.	Parts No.	Description	Q'ty (A)	(B)	(C)	(D)	(E)	(F)	I	R
2	2	119773-53901	VALVE ASSY,INJECTION	6	6	6					
3	3	X0931006600	HOLDER ASSY, NOZZLE	6	6	6					
4	3	X0934006770	NOZZLE ASSY	6	6	6					
5	3	X0931330290	GASKET	6	6	6					
6	3	119773-53920	SCREW	1	1	1					
8	2	119770-00790	CLAMP	6	6	6					
9	2	119770-00800	PIPE, NOZZLE LEAKAGE	1	1	1					
10	2	119771-00370	PIPE, NOZZLE LEAKAGE	1	1	1					
11	2	119770-90910	BOLT	6	6	6					
12	2	119770-90920	WASHER	6	6	6					
13	2	119770-90930	CLIP	2	2	2					
14	2	119770-90940	O-RING	6	6	6					
15	2	119770-01050	PLATE	12	12	12					
16	2	119770-00781	SEAT, VALVE	6	6	6					
18	1	119773-59500	PIPE, FUEL	1	1	1					
19	1	119773-59511	PIPE, FUEL	1	1	1					
20	1	23000-016000	CLAMP, 16	2	2	2					

N:Old ←Yes/No→ New, Q:Old ←No/Yes→ New, R:Old ←Yes/Yes→ New, S:Old ←No/No→ New, W:Add, Z:Discontinued, F:Interchangeable by set, K:Q'ty Change

Copyright (C) YANMAR CO., LTD. All RightsReserved.

Fig.45. FUEL INJECTION VALVE (6LP-ST(Z)E(P)1)

(A)=6LP(A)-DTE(P
(B)=6LP(A-DTZE(P
(C)=6LP(A-DTZEP1
(D)=6LP(A)-STE(P
(E)=6LP(A-STZE(P
(F)=6LP(A-STZEP1

Y00R5420

Fig.45 燃料噴射弁(6LP-ST(Z)E(P)(1))
FUEL INJECTION VALVE (6LP-ST(Z)E(P)(1))

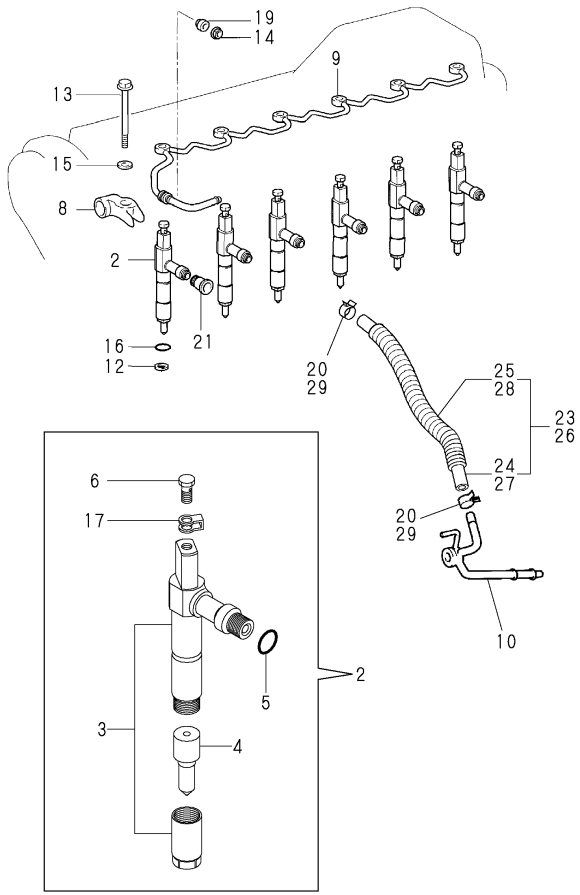

No.	Lev.	Parts No.	Description	Q'ty (A)	(B)	(C)	(D)	(E)	(F)	I	R
2	2	119775-53901	VALVE ASSY,INJECTION				6	6	6		
3	3	X0931006610	HOLDER ASSY, NOZZLE				6	6	6		
4	3	X0934006780	NOZZLE ASSY				6	6	6		
5	3	X0932490090	O-RING				6	6	6		
6	3	119775-53920	SCREW				6	6	6		
8	2	119771-00350	CLAMP				6	6	6		
9	2	119771-00360	PIPE				1	1	1		
10	2	119771-00370	PIPE, NOZZLE LEAKAGE				1	1	1		
12	2	119770-00781	SEAT, VALVE				6	6	6		
13	2	119771-90290	BOLT				6	6	6		
14	2	119771-90300	NUT				1	1	1		
15	2	119771-90310	WASHER				6	6	6		
16	2	119771-90320	O-RING				6	6	6		
17	2	119771-90330	GASKET				6	6	6		
19	2	119770-90670	GASKET				1	1	1		
20	2	119770-90930	CLIP				4	4	4		
21	2	119771-00340	SEAL				6	6	6		
23	1	119775-59520	PIPE ASSY, FUEL				1	1	1		
24	2	119775-59500	PIPE ASSY, FUEL				1	1	1		
25	2	119775-59510	TUBE, CORRUGATED				1	1	1		
26	1	119775-59540	PIPE ASSY, RETURN				1	1	1		
27	2	119775-59551	PIPE				1	1	1		
28	2	119775-59560	TUBE, CORRUGATED				1	1	1		
29	1	23000-016000	CLAMP, 16				2	2	2		

N:Old ←Yes/No→ New, Q:Old ←No/Yes→ New, R:Old ←Yes/Yes→ New, S:Old ←No/No→ New, W:Add, Z:Discontinued, F:Interchangeable by set, K:Q'ty Change

Copyright (C) YANMAR CO., LTD. All RightsReserved.

Fig.46. FUEL INJECTION PIPE(6LP-DT(Z)E(P)1)

Y00R5420

Fig.46 燃料噴射パイプ(6LP-DT(Z)E(P)(1))
FUEL INJECTION PIPE(6LP-DT(Z)E(P)(1))

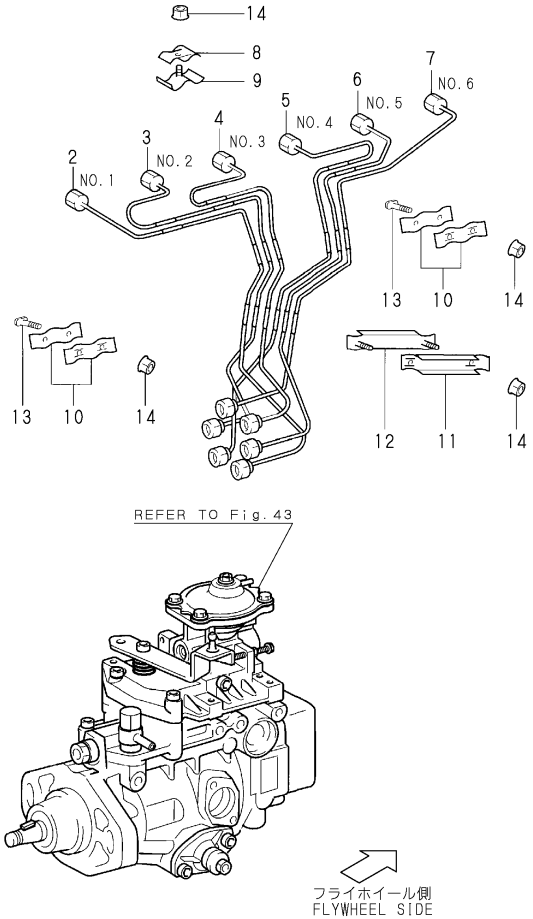

(A)=6LP(A)-DTE(P (D)=6LP(A)-STE(P
(B)=6LP(A-DTZE(P (E)=6LP(A-STZE(P
(C)=6LP(A-DTZEP1 (F)=6LP(A-STZEP1

No.	Lev.	Parts No.	Description	Q'ty (A)	(B)	(C)	(D)	(E)	(F)	I	R
2	2	119770-00820	PIPE ASSY, INJECTION	1	1	1					
3	2	119770-00830	PIPE ASSY, INJECTION	1	1	1					
4	2	119770-00840	PIPE ASSY, INJECTION	1	1	1					
5	2	119770-00850	PIPE ASSY, INJECTION	1	1	1					
6	2	119770-00860	PIPE ASSY, INJECTION	1	1	1					
7	2	119770-00870	PIPE ASSY, INJECTION	1	1	1					
8	2	119770-00880	CLAMP	3	3	3					
9	2	119770-00890	CLAMP	3	3	3					
10	2	119770-00900	CLAMP	4	4	4					
11	2	119770-00910	CLAMP	1	1	1					
12	2	119770-00920	CLAMP	1	1	1					
13	2	119770-90950	STUD	4	4	4					
14	2	119770-90960	NUT	9	9	9					

N:Old $\overset{\text{Yes}}{\underset{\text{No}}{\leftrightarrows}}$ New, Q:Old $\overset{\text{No}}{\underset{\text{Yes}}{\leftrightarrows}}$ New, R:Old $\overset{\text{Yes}}{\underset{\text{Yes}}{\leftrightarrows}}$ New, S:Old $\overset{\text{No}}{\underset{\text{No}}{\leftrightarrows}}$ New, W:Add, Z:Discontinued, F:Interchangeable by set, K:Q'ty Change

Copyright (C) YANMAR CO., LTD. All RightsReserved.

Fig.47. FUEL INJECTION PIPE(6LP-ST(Z)E(P)1)

(A)=6LP(A)-DTE(P
(B)=6LP(A-DTZE(P
(C)=6LP(A-DTZEP1
(D)=6LP(A)-STE(P
(E)=6LP(A-STZE(P
(F)=6LP(A-STZEP1

Y00R5420

Fig.47 燃料噴射パイプ(6LP−ST(Z)E(P)(1))
FUEL INJECTION PIPE(6LP-ST(Z)E(P)(1))

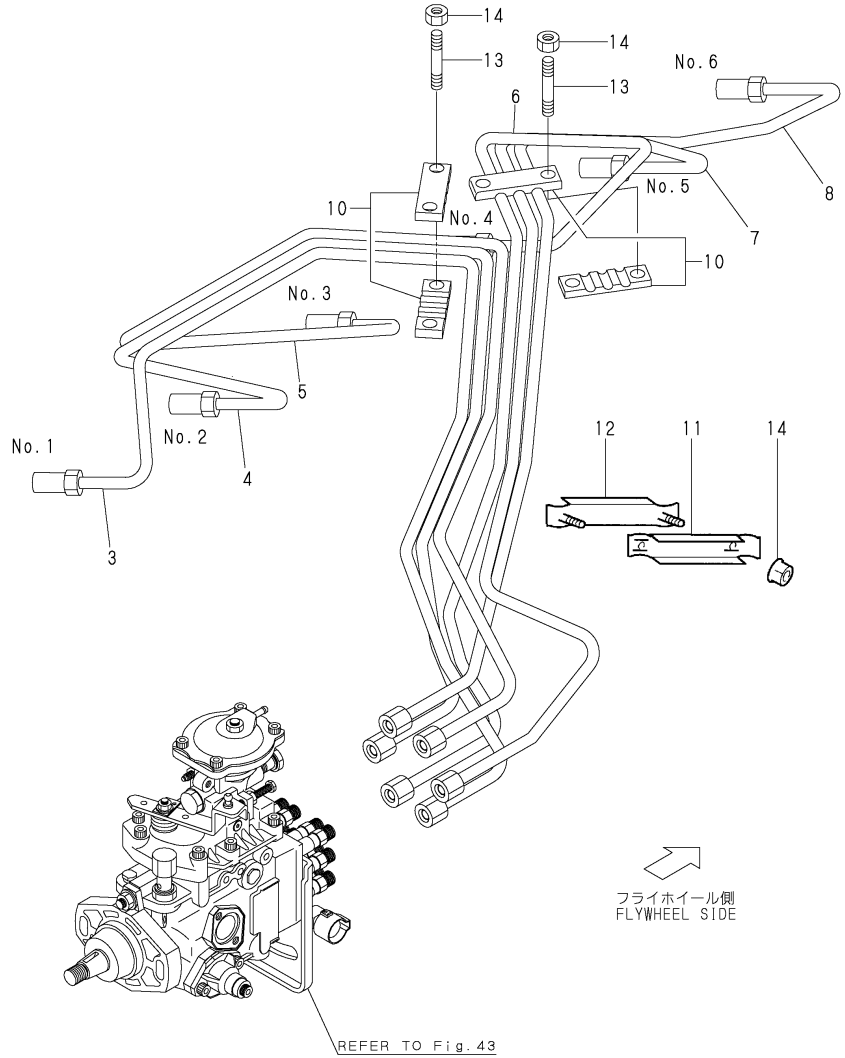

No.	Lev.	Parts No.	Description	Q'ty (A)	(B)	(C)	(D)	(E)	(F)	I	R
3	2	119775-59803	PIPE ASSY, INJECTION				1	1	1		
4	2	119775-59813	PIPE ASSY, INJECTION				1	1	1		
5	2	119775-59823	PIPE ASSY, INJECTION				1	1	1		
6	2	119775-59833	PIPE ASSY, INJECTION				1	1	1		
7	2	119775-59843	PIPE ASSY, INJECTION				1	1	1		
8	2	119775-59853	PIPE ASSY, INJECTION				1	1	1		
10	2	119771-00390	CLAMP				2	2	2		
11	2	119770-00910	CLAMP				1	1	1		
12	2	119770-00920	CLAMP				1	1	1		
13	2	119771-90340	STUD				4	4	4		
14	2	119770-90960	NUT				6	6	6		

N:Old $\xleftrightarrow[\text{No}]{\text{Yes}}$ New, Q:Old $\xleftrightarrow[\text{Yes}]{\text{No}}$ New, R:Old $\xleftrightarrow[\text{Yes}]{\text{Yes}}$ New, S:Old $\xleftrightarrow[\text{No}]{\text{No}}$ New, W:Add, Z:Discontinued, F:Interchangeable by set, K:Q'ty Change

Copyright (C) YANMAR CO., LTD. All RightsReserved.

Fig.48. FUEL PIPE

Y00R5420

Fig.48 燃料パイプ FUEL PIPE

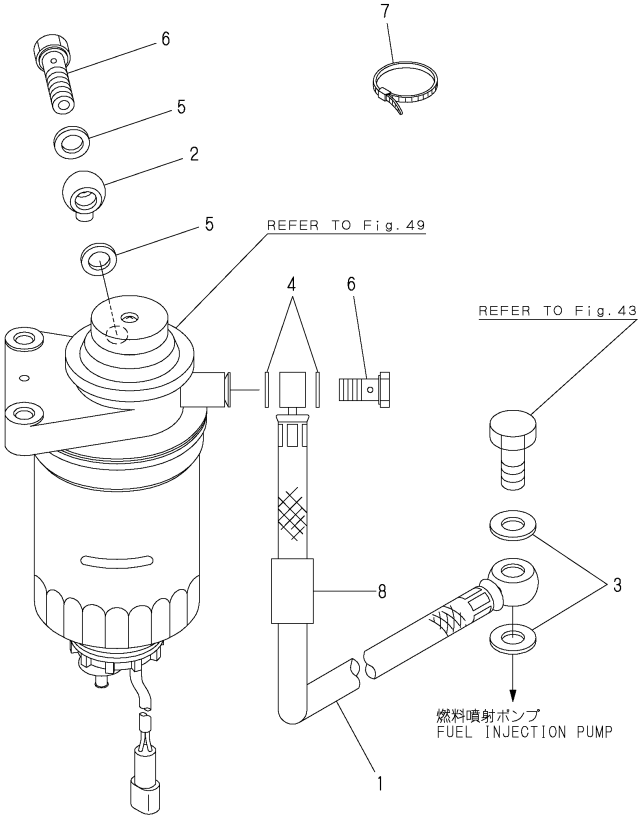

(A)=6LP(A)-DTE(P (D)=6LP(A)-STE(P
(B)=6LP(A-DTZE(P (E)=6LP(A-STZE(P
(C)=6LP(A-DTZEP1 (F)=6LP(A-STZEP1

No.	Lev.	Parts No.	Description	Q'ty (A)	(B)	(C)	(D)	(E)	(F)	I	R
1	1	119773-59101	PIPE ASSY, FUEL	1	1	1	1	1	1		
2	1	121855-59880	JOINT, PIPE	1	1	1	1	1	1		
3	1	22190-120002	WASHER, SEAL 12	2	2	2	2	2	2		
4	1	22190-140002	WASHER, SEAL 14	2	2	2	2	2	2		
5	1	22190-140002	WASHER, SEAL 14	2	2	2	2	2	2		
6	1	23857-080000	BOLT, JOINT 8	2	2	2	2	2	2		
7	1	121750-59890	BAND, 140	1	1	1	1	1	1		
8	1	119778-26670	COVER	1	1	1	1	1	1		

N:Old $\xleftrightarrow[\text{No}]{\text{Yes}}$ New, Q:Old $\xleftrightarrow[\text{Yes}]{\text{No}}$ New, R:Old $\xleftrightarrow[\text{Yes}]{\text{Yes}}$ New, S:Old $\xleftrightarrow[\text{No}]{\text{No}}$ New, W:Add, Z:Discontinued, F:Interchangeable by set, K:Q'ty Change

Copyright (C) YANMAR CO., LTD. All RightsReserved.

Fig.49. FUEL STRAINER

P/C NEWS No.:Y00R5420-8
PUBLISHED :2007/12

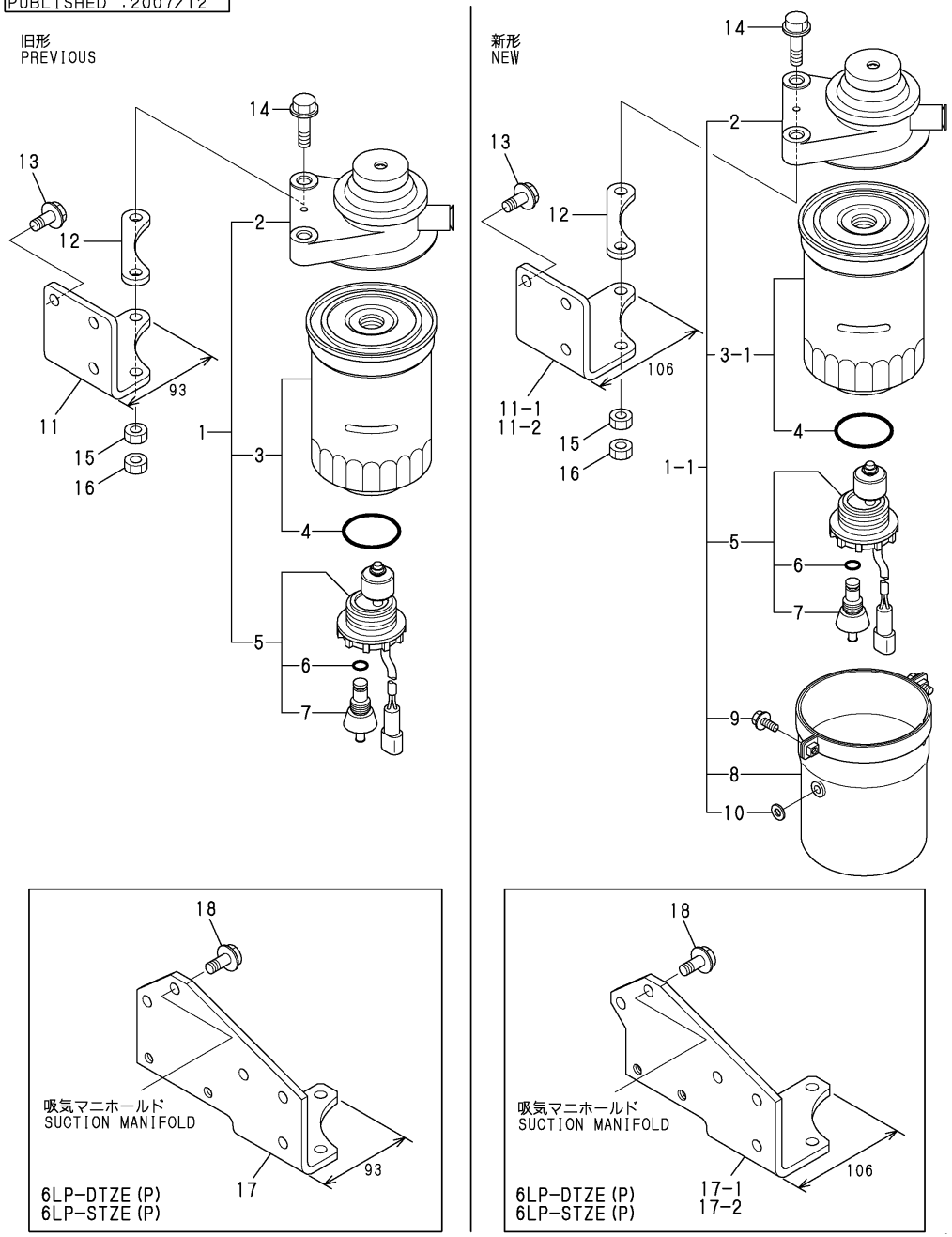

(A)=6LP(A)-DTE(P (D)=6LP(A)-STE(P
(B)=6LP(A-DTZE(P (E)=6LP(A-STZE(P
(C)=6LP(A-DTZEP1 (F)=6LP(A-STZEP1

No.	Lev.	Parts No.	Description	Q'ty (A)	(B)	(C)	(D)	(E)	(F)	I	R
1	1	119773-55500	FILTER ASSY, FUEL	1	1	1	1	1	1		
1-1	1	119773-55700	FILTER ASSY, FUEL	1	1	1	1	1	1	S	
	(A=*200.06)	(B=*200.06)	(C=*200.06)	(D=*200.06)	(E=*200.06)			(F=*200.06)			
2	2	X0861001400	CAP ASSY, FILTER	1	1	1	1	1	1		
3	2	X5186100664	STRAINER ASSY, FUEL	1	1	1	1	1	1		
3-1	2	119773-55710	STRAINER, FUEL	1	1	1	1	1	1	S	
	(A=*200.06)	(B=*200.06)	(C=*200.06)	(D=*200.06)	(E=*200.06)			(F=*200.06)			
4	3	X9080240360	O-RING	1	1	1	1	1	1		
5	2	X0719005370	SWITCH ASSY	1	1	1	1	1	1		
6	3	X9080210070	O-RING	1	1	1	1	1	1		
7	3	X0719240010	BOLT, DRAIN	1	1	1	1	1	1		
8	2	X0862202820	COVER, FILTER	1	1	1	1	1	1	W	
	(A=*200.06)	(B=*200.06)	(C=*200.06)	(D=*200.06)	(E=*200.06)			(F=*200.06)			
9	2	X9147005121	BOLT	2	2	2	2	2	2	W	
	(A=*200.06)	(B=*200.06)	(C=*200.06)	(D=*200.06)	(E=*200.06)			(F=*200.06)			
10	2	X0860620180	WASHER	1	1	1	1	1	1	W	
	(A=*200.06)	(B=*200.06)	(C=*200.06)	(D=*200.06)	(E=*200.06)			(F=*200.06)			
11	1	119773-55601	BRACKET	1		1	1		1		
11-1	1	119773-55602	BRACKET	1		1	1		1	S	
	(A=*200.06)		(C=*200.06)	(D=*200.06)				(F=*200.06)			
11-2	1	119775-55600	BRACKET	1		1	1		1	R	
	(A=*2006.03)		(C=*2006.03)	(D=*2006.03)				(F=*2006.03)			
12	1	119773-55620	SEAT, RUBBER	1	1	1	1	1	1		
13	1	26106-080182	BOLT, M8X 18 PLATED	3		3	3		3		
14	1	26106-080402	BOLT, M8X 40 PLATED	2	2	2	2	2	2		
15	1	26716-080002	NUT, M8	2	2	2	2	2	2		
16	1	26756-080002	NUT, LOCK M8	2	2	2	2	2	2		
17	1	119787-26512	BRACKET		1			1			
17-1	1	119787-26513	BRACKET		1			1		S	
		(B=*200.06)			(E=*200.06)						
17-2	1	119778-26511	BRACKET		1			1		R	
		(B=*2006.03)			(E=*2006.03)						
18	1	26106-080182	BOLT, M8X 18 PLATED		5			5			

N:Old $\xleftarrow[\text{No}]{\text{Yes}}$ New, Q:Old $\xleftarrow[\text{Yes}]{\text{No}}$ New, R:Old $\xleftarrow[\text{Yes}]{\text{Yes}}$ New, S:Old $\xleftarrow[\text{No}]{\text{No}}$ New, W:Add, Z:Discontinued, F:Interchangeable by set, K:Q'ty Change

Copyright (C) YANMAR CO., LTD. All RightsReserved.

Fig.50. FUEL COOLER

Y00R5420

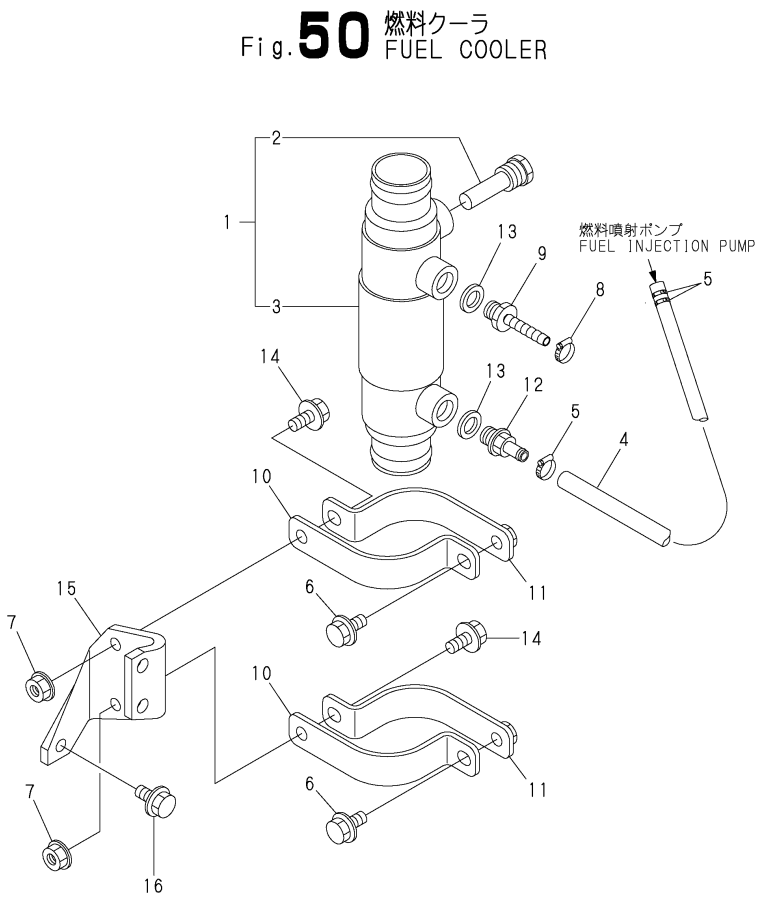

(A)=6LP(A)-DTE(P (D)=6LP(A)-STE(P
(B)=6LP(A-DTZE(P (E)=6LP(A-STZE(P
(C)=6LP(A-DTZEP1 (F)=6LP(A-STZEP1

No.	Lev.	Parts No.	Description	Q'ty (A)	(B)	(C)	(D)	(E)	(F)	I	R
1	1	119773-55750	COOLER ASSY, FUEL	1	1	1	1	1	1		
2	2	119574-44150	ZINC, ANTI-CORROSIVE	1	1	1	1	1	1		
3	2	119773-55760	BODY, COOLER	1	1	1	1	1	1		
4	1	119773-59123	PIPE, FUEL RETURN	1	1	1	1	1	1		
5	1	23000-019000	CLAMP, 19	3	3	3	3	3	3		
6	1	26106-080162	BOLT, M8X 16 PLATED	2	2	2	2	2	2		
7	1	26306-080002	NUT, M8	2	2	2	2	2	2		
8	1	119770-90930	CLIP	1	1	1	1	1	1		
9	1	119773-55770	JOINT	1	1	1	1	1	1		
10	1	119773-55870	BAND, COOLER	2	2	2	2	2	2		
11	1	119773-55890	BAND, COOLER	2	2	2	2	2	2		
12	1	121250-49110	JOINT, PIPE	1	1	1	1	1	1		
13	1	22190-140002	WASHER, SEAL 14	2	2	2	2	2	2		
14	1	26106-080202	BOLT, M8X 20 PLATED	2	2	2	2	2	2		
15	1	119773-55830	BRACKET	1	1	1	1	1	1		
16	1	26106-080302	BOLT, M8X 30 PLATED	1	1	1	1	1	1		

N:Old $\frac{\text{Yes}}{\text{No}}$ New, Q:Old $\frac{\text{No}}{\text{Yes}}$ New, R:Old $\frac{\text{Yes}}{\text{Yes}}$ New, S:Old $\frac{\text{No}}{\text{No}}$ New, W:Add, Z:Discontinued, F:Interchangeable by set, K:Q'ty Change

Copyright (C) YANMAR CO., LTD. All RightsReserved.

Fig.51. GLOW PLUG

Y00R5420

Fig.51 グロープラグ＆ヒータプラグ
GLOW PLUG & HEATER PLUG

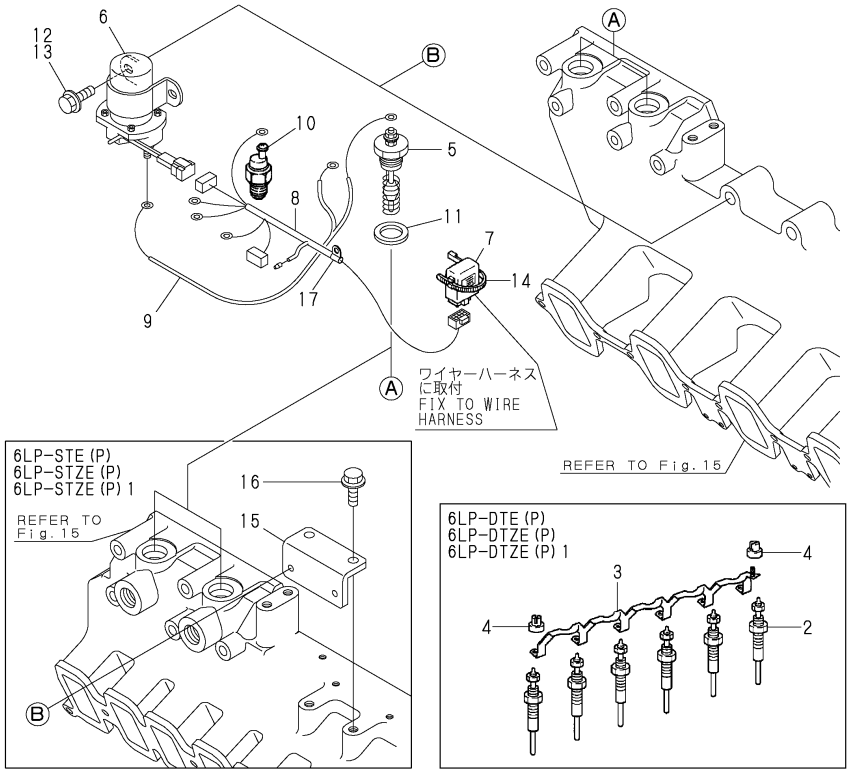

(A)=6LP(A)-DTE(P (D)=6LP(A)-STE(P
(B)=6LP(A-DTZE(P (E)=6LP(A-STZE(P
(C)=6LP(A-DTZEP1 (F)=6LP(A-STZEP1

No.	Lev.	Parts No.	Description	Q'ty (A)	(B)	(C)	(D)	(E)	(F)	I	R
2	2	119770-00760	PLUG ASSY, GLOW	6	6	6					
3	2	119770-00770	CONNECTOR	1	1	1					
4	2	119770-90880	CLAMP	6	6	6					
5	1	119575-77050	PLUG	2	2	2	2	2	2		
6	1	119575-77060	RELAY, HEATER	1	1	1	1	1	1		
7	1	119575-77071	CONTROLLER	1	1	1	1	1	1		
8	1	119773-77850	HARNESS, WIRE	1	1	1	1	1	1		
9	1	119773-77860	HARNESS, WIRE	1	1	1	1	1	1		
10	1	124616-91370	SWITCH, 42	1	1	1	1	1	1		
11	1	23414-200000	GASKET, 20X1.0	2	2	2	2	2	2		
12	1	26106-060202	BOLT, M6X 20 PLATED	2	2	2					
13	1	26014-060122	BOLT, M6X 12				2	2	2		
14	1	29622-250001	BAND, RF250	2	2	2	2	2	2		
15	1	119775-77650	BRACKET, RELAY				1	1	1		
16	1	26106-080202	BOLT, M8X 20 PLATED				2	2	2		
17	1	119593-39450	RETAINER	1	1	1	1	1	1		

N:Old $\xleftrightarrow[\text{No}]{\text{Yes}}$ New, Q:Old $\xleftrightarrow[\text{Yes}]{\text{No}}$ New, R:Old $\xleftrightarrow[\text{Yes}]{\text{Yes}}$ New, S:Old $\xleftrightarrow[\text{No}]{\text{No}}$ New, W:Add, Z:Discontinued, F:Interchangeable by set, K:Q'ty Change

Copyright (C) YANMAR CO., LTD. All RightsReserved.

Fig.52. CABLE BRACKET

(A)=6LP(A)-DTE(P (D)=6LP(A)-STE(P
(B)=6LP(A-DTZE(P (E)=6LP(A-STZE(P
(C)=6LP(A-DTZEP1 (F)=6LP(A-STZEP1

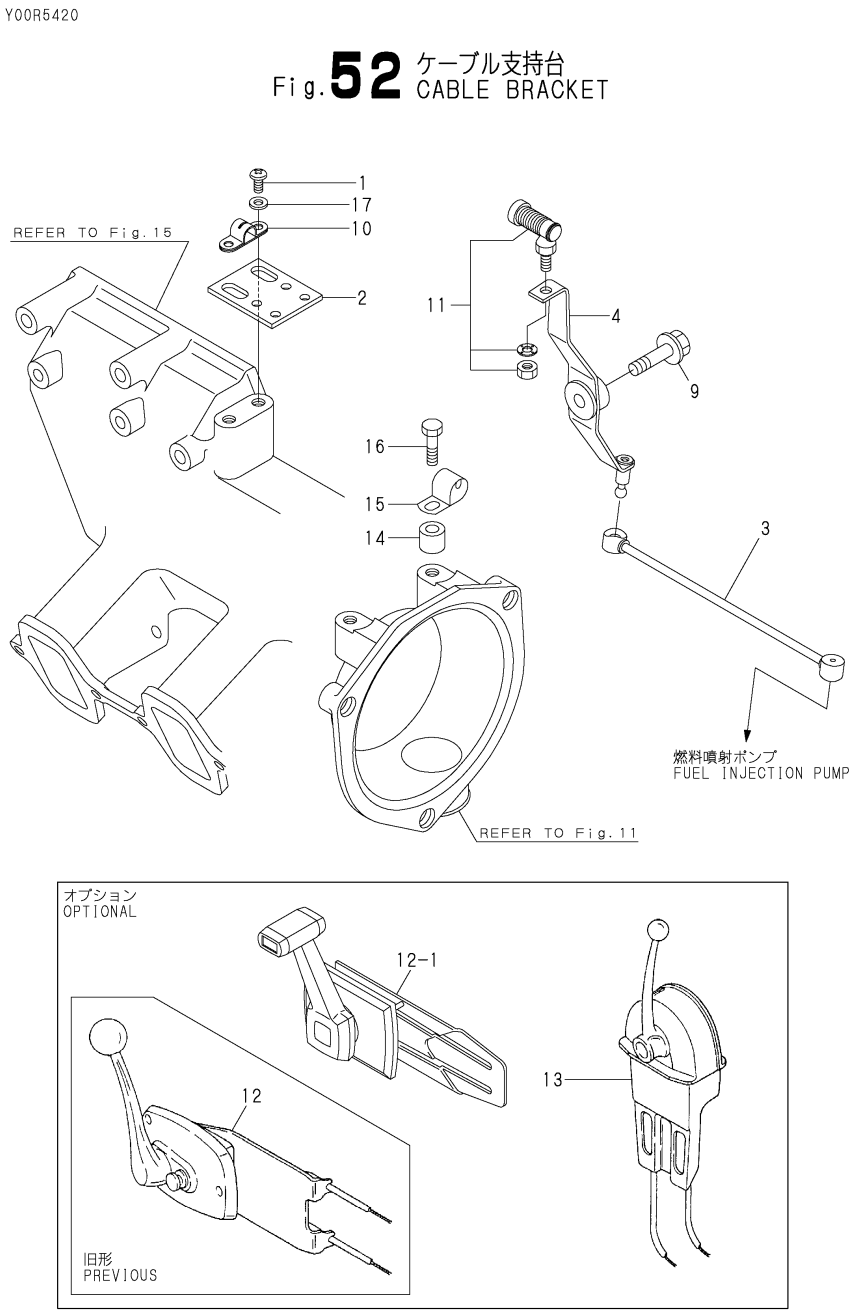

No.	Lev.	Parts No.	Description	Q'ty (A)	(B)	(C)	(D)	(E)	(F)	I	R
1	1	26022-050162	SCREW, M5X16	2	2	2	2	2	2		
2	1	119773-67101	BRACKET	1	1	1	1	1	1		
3	1	119773-67150	ROD, CONTROL	1	1	1	1	1	1		
4	1	119773-67220	LEVER ASSY	1	1	1	1	1	1		
9	1	26106-080302	BOLT, M8X 30 PLATED	1	1	1	1	1	1		
10	1	41710-000410	CLAMP	1	1	1	1	1	1		
11	1	41710-001300	JOINT, BALL	1	1	1	1	1	1		
12	1	128170-86500	CONTROLLER	1	1	1	1	1	1		
12-1	1	128170-86501	REMOCON HEAD (MN	1	1	1	1	1	1	S	
	(A=*2001.10)	(B=*2001.10)	(C=*2001.10)	(D=*2001.10)		(E=*2001.10)		(F=*2001.10)			
13	1	41730-000681	MT-3 REMO-CON	1	1	1	1	1	1		
14	1	127688-77340	SPACER	1	1	1	1	1	1		
15	1	160870-78700	CLAMP	1	1	1	1	1	1		
16	1	26106-080302	BOLT, M8X 30 PLATED	1	1	1	1	1	1		
17	1	22217-050000	WASHER, SPRING 5	2	2	2	2	2	2		

N:Old $\overset{\text{Yes}}{\underset{\text{No}}{\leftrightarrow}}$ New, Q:Old $\overset{\text{No}}{\underset{\text{Yes}}{\leftrightarrow}}$ New, R:Old $\overset{\text{Yes}}{\underset{\text{Yes}}{\leftrightarrow}}$ New, S:Old $\overset{\text{No}}{\underset{\text{No}}{\leftrightarrow}}$ New, W:Add, Z:Discontinued, F:Interchangeable by set, K:Q'ty Change

Copyright (C) YANMAR CO., LTD. All RightsReserved.

Fig.53. POWER STEERING PUMP

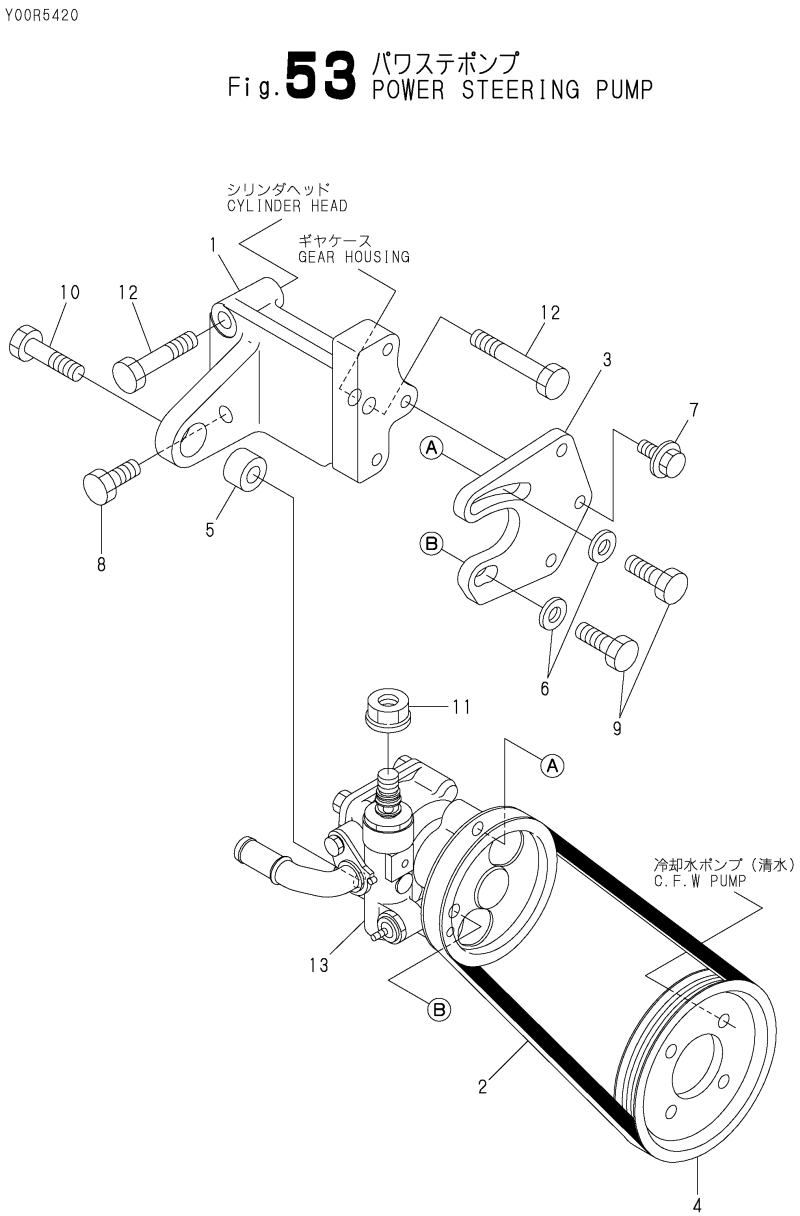

(A)=6LP(A)-DTE(P (D)=6LP(A)-STE(P
(B)=6LP(A-DTZE(P (E)=6LP(A-STZE(P
(C)=6LP(A-DTZEP1 (F)=6LP(A-STZEP1

No.	Lev.	Parts No.	Description	Q'ty (A)	(B)	(C)	(D)	(E)	(F)	I	R
1	1	119778-26500	BRACKET		1			1			
2	1	119787-26540	V-BELT, 4PK665		1			1			
3	1	119778-26550	ADJUSTER, BELT		1			1			
4	1	119787-49300	V-PULLEY		1			1			
5	1	119773-77340	COLLAR		1			1			
6	1	22137-100000	WASHER, 10		2			2			
7	1	26106-080182	BOLT, M8X 18 PLATED		3			3			
8	1	26136-100252	BOLT, M10X 25 PLATED		1			1			
9	1	26136-100252	BOLT, M10X 25 PLATED		2			2			
10	1	26136-100302	BOLT, M10X 30 PLATED		1			1			
11	1	26376-120002	NUT, M12		1			1			
12	1	26136-100602	BOLT, M10X 60 PLATED		2			2			
13	1	119787-26100	PUMP, STEERING		1			1			
14	1	24351-010110	O-RING, 1A1011		2			2		W	
			(B=FROM 1ST)		(E=FROM 1ST)						

N:Old ←Yes/No→ New, Q:Old ←No/Yes→ New, R:Old ←Yes/Yes→ New, S:Old ←No/No→ New, W:Add, Z:Discontinued, F:Interchangeable by set, K:Q'ty Change

Copyright (C) YANMAR CO., LTD. All RightsReserved.

Fig.54. POWER STEERING COOLER & TANK

Y00R5420

Fig.54 パワステクーラ&タンク
POWER STEERING COOLER & TANK

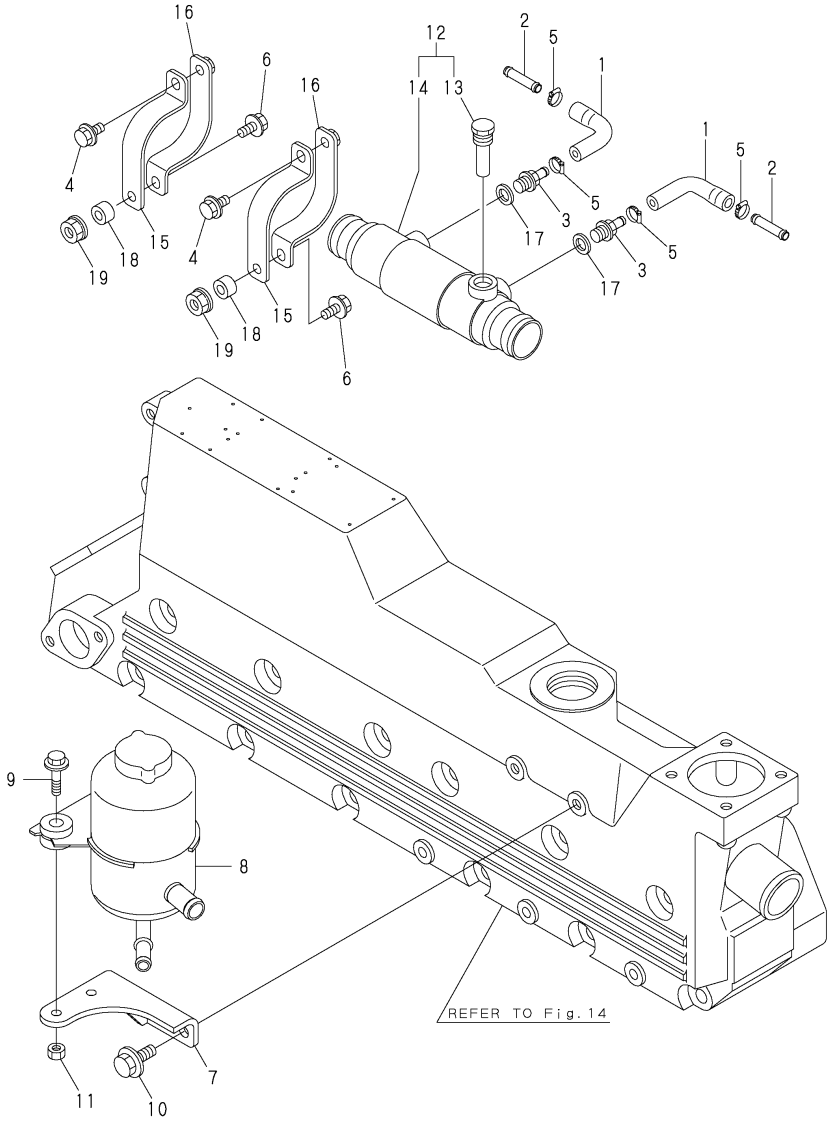

(A)=6LP(A)-DTE(P (D)=6LP(A)-STE(P
(B)=6LP(A-DTZE(P (E)=6LP(A-STZE(P
(C)=6LP(A-DTZEP1 (F)=6LP(A-STZEP1

No.	Lev.	Parts No.	Description	Q'ty (A)	(B)	(C)	(D)	(E)	(F)	I	R
1	1	119778-26620	TUBE, CORRUGATED		2			2			
2	1	119778-26750	JOINT		2			2			
3	1	121250-49110	JOINT, PIPE		2			2			
4	1	26106-080162	BOLT, M8X 16 PLATED		2			2			
5	1	23000-016000	CLAMP, 16		4			4			
6	1	26106-080202	BOLT, M8X 20 PLATED		2			2			
7	1	119787-26520	BRACKET		1			1			
8	1	196346-34860	TANK, OIL		1			1			
9	1	26106-060252	BOLT, M6X 25 PLATED		2			2			
10	1	26106-080252	BOLT, M8X 25 PLATED		2			2			
11	1	26716-060002	NUT, M6		2			2			
12	1	119773-55750	COOLER ASSY, FUEL		1			1			
13	2	119574-44150	ZINC, ANTI-CORROSIVE		1			1			
14	2	119773-55760	BODY, COOLER		1			1			
15	1	119773-55870	BAND, COOLER		2			2			
16	1	119773-55890	BAND, COOLER		2			2			
17	1	23414-140018	GASKET, 14X1.0		2			2			
18	1	127610-03150	SPACER		2			2			
19	1	26306-080002	NUT, M8		2			2			

N:Old $\xleftrightarrow[\text{No}]{\text{Yes}}$ New, Q:Old $\xleftrightarrow[\text{Yes}]{\text{No}}$ New, R:Old $\xleftrightarrow[\text{Yes}]{\text{Yes}}$ New, S:Old $\xleftrightarrow[\text{No}]{\text{No}}$ New, W:Add, Z:Discontinued, F:Interchangeable by set, K:Q'ty Change

Copyright (C) YANMAR CO., LTD. All RightsReserved.

Fig.55. ATF PIPE

Y00R5420

Fig.55 ATFパイプ ATF PIPE

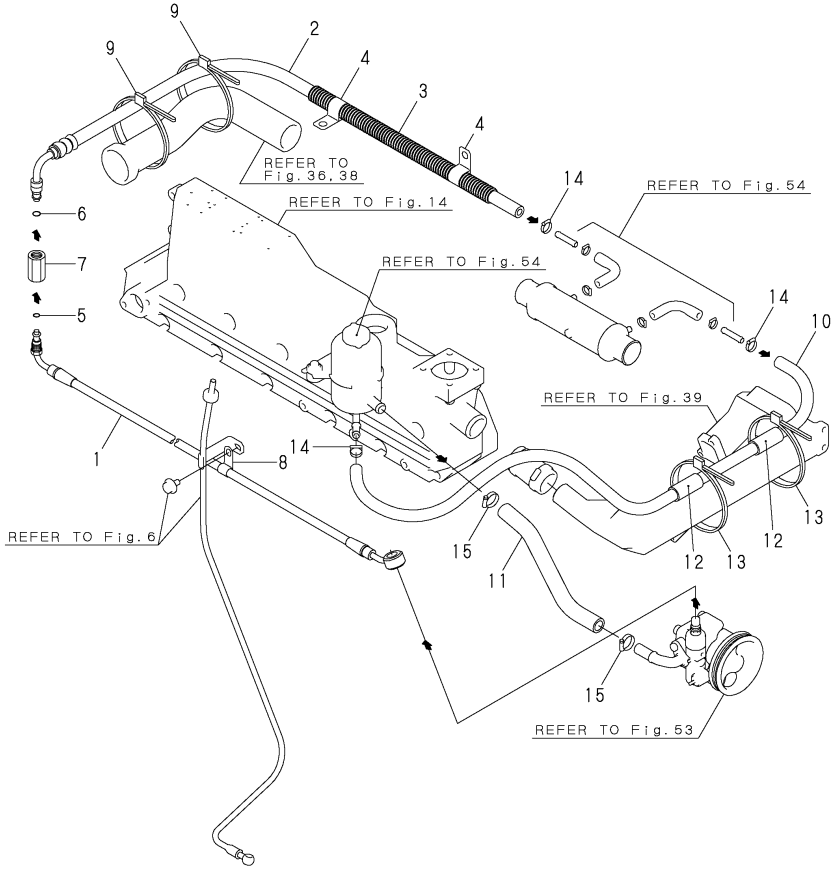

(A)=6LP(A)-DTE(P (D)=6LP(A)-STE(P
(B)=6LP(A-DTZE(P (E)=6LP(A-STZE(P
(C)=6LP(A-DTZEP1 (F)=6LP(A-STZEP1

No.	Lev.	Parts No.	Description	Q'ty (A)	(B)	(C)	(D)	(E)	(F)	I	R
1	1	119778-26600	TUBE, CORRUGATED		1			1			
2	1	119778-26610	TUBE, CORRUGATED		1			1			
3	1	119778-26650	TUBE, CORRUGATED		1			1			
4	1	119778-26660	RETAINER		2			2			
5	1	119778-26700	O-RING		1			1			
6	1	119778-26710	O-RING		1			1			
7	1	119778-26800	JOINT		1			1			
8	1	119593-39450	RETAINER		1			1			
9	1	194250-51660	BAND, NYLON		2			2			
10	1	119787-26550	TUBE, CORRUGATED		1			1			
11	1	119787-26561	TUBE, CORRUGATED		1			1			
12	1	119778-26670	COVER		2			2			
13	1	194250-51660	BAND, NYLON		2			2			
14	1	23000-016000	CLAMP, 16		3			3			
15	1	23000-025000	CLAMP, 25		2			2			

N:Old $\xleftrightarrow[\text{No}]{\text{Yes}}$ New, Q:Old $\xleftrightarrow[\text{Yes}]{\text{No}}$ New, R:Old $\xleftrightarrow[\text{Yes}]{\text{Yes}}$ New, S:Old $\xleftrightarrow[\text{No}]{\text{No}}$ New, W:Add, Z:Discontinued, F:Interchangeable by set, K:Q'ty Change

Copyright (C) YANMAR CO., LTD. All RightsReserved.

Fig.56. CLUTCH & DRIVE ATTACHMENT

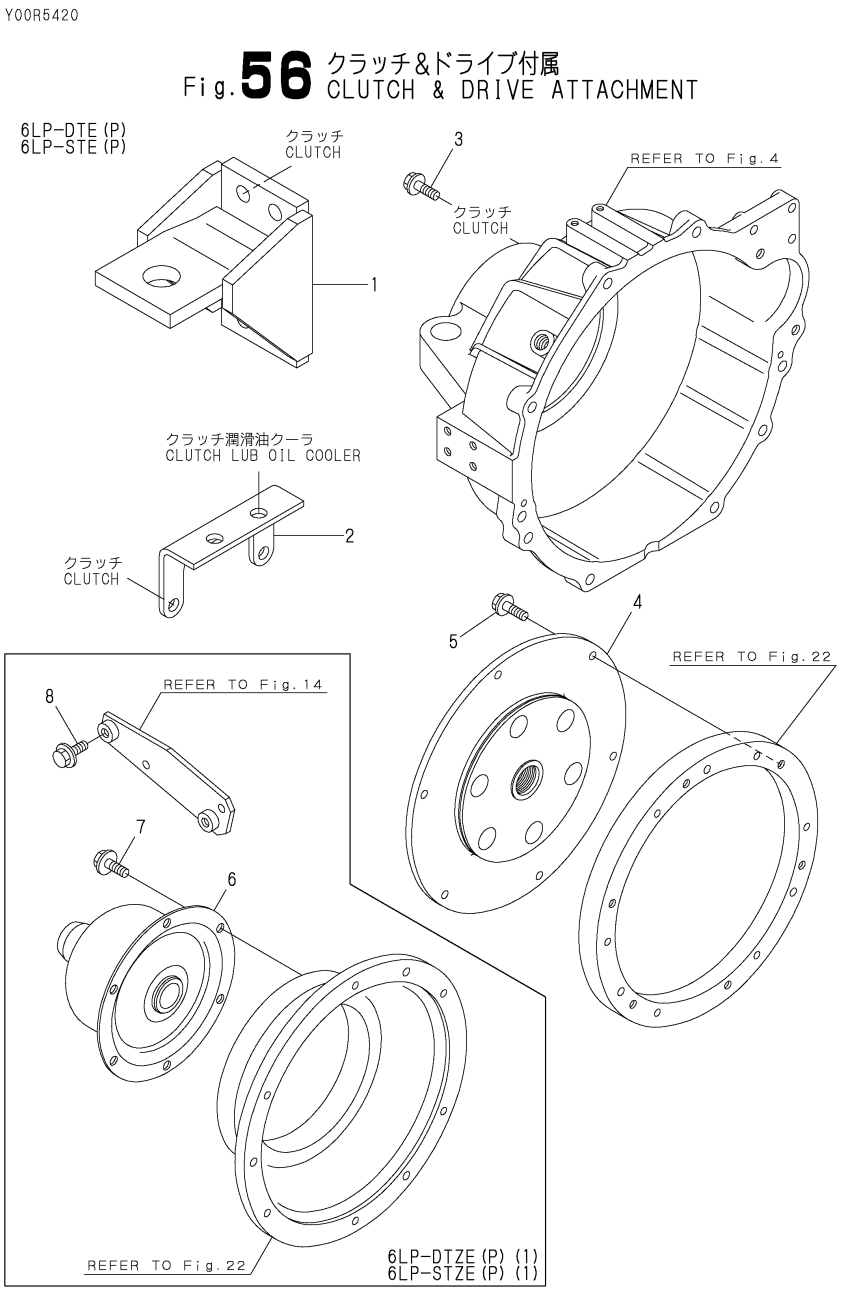

(A)=6LP(A)-DTE(P (D)=6LP(A)-STE(P
(B)=6LP(A-DTZE(P (E)=6LP(A-STZE(P
(C)=6LP(A-DTZEP1 (F)=6LP(A-STZEP1

No.	Lev.	Parts No.	Description	Q'ty (A)	(B)	(C)	(D)	(E)	(F)	I	R
1	1	119773-08250	FOOT, MOUNTING	2			2				
2	1	119773-85550	BRACKET	1			1				
3	1	26106-100302	BOLT, M10X 30 PLATED	6			6				
4	1	119773-85520	DAMPER	1			1				
4A	1	119773-85500	DAMPER	1			1				
5	1	26136-100302	BOLT, M10X 30 PLATED	6			6				
5A	1	26136-100252	BOLT, M10X 25 PLATED	6			6				
6	1	119778-85500	COUPLING ASSY		1	1		1	1		
7	1	26106-100202	BOLT, M10X 20 PLATED		6	6		6	6		
8	1	26106-100182	BOLT, M10X 18 PLATED		2	2		2	2		

N:Old $\xleftarrow[\text{No}]{\text{Yes}}$ New, Q:Old $\xleftarrow[\text{Yes}]{\text{No}}$ New, R:Old $\xleftarrow[\text{Yes}]{\text{Yes}}$ New, S:Old $\xleftarrow[\text{No}]{\text{No}}$ New, W:Add, Z:Discontinued, F:Interchangeable by set, K:Q'ty Change

Copyright (C) YANMAR CO., LTD. All RightsReserved.

Fig.57. STARTING MOTOR

Y00R5420

Fig.57 スターティングモータ STARTING MOTOR

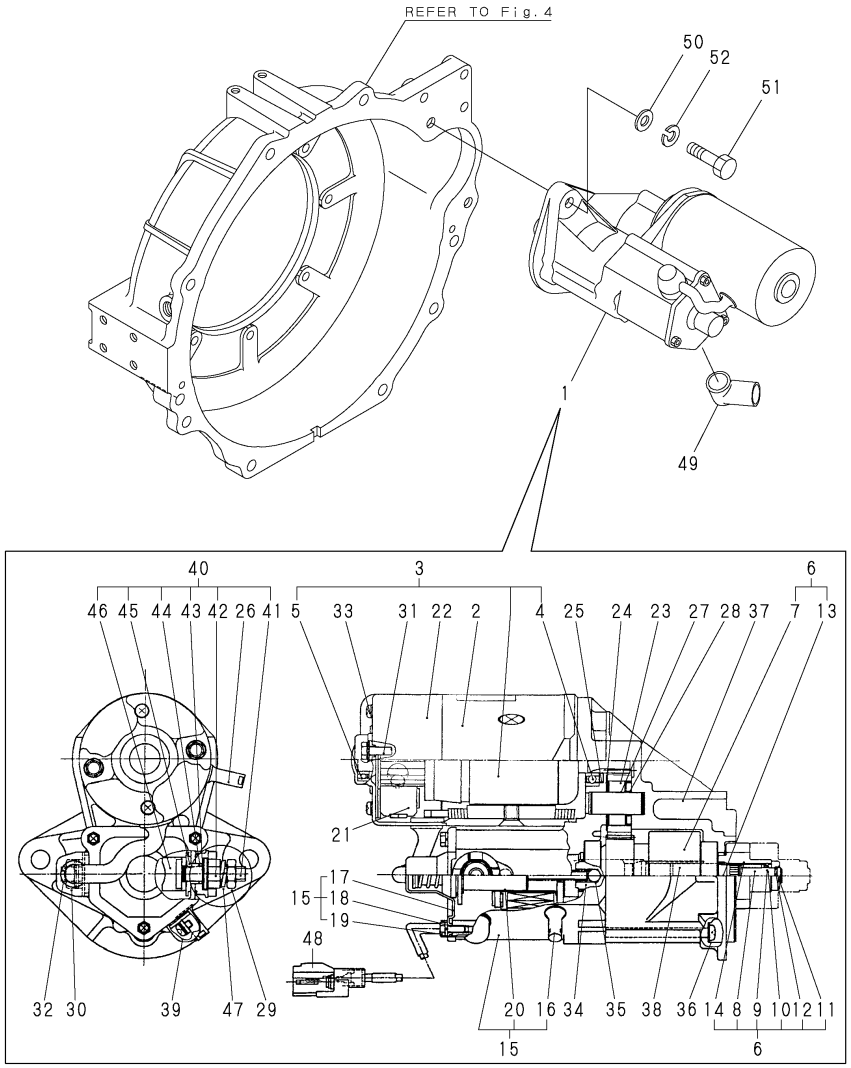

(A)=6LP(A)-DTE(P (D)=6LP(A)-STE(P
(B)=6LP(A-DTZE(P (E)=6LP(A-STZE(P
(C)=6LP(A-DTZEP1 (F)=6LP(A-STZEP1

No.	Lev.	Parts No.	Description	Q'ty (A)	(B)	(C)	(D)	(E)	(F)	I	R
1	1	119773-77010	MOTOR, STARTING	1	1	1	1	1	1		
2	2	X0281003001	YOKE	1	1	1	1	1	1		
3	2	X0282001780	ARMATURE	1	1	1	1	1	1		
4	3	X9491001930	BEARING	1	1	1	1	1	1		
5	3	X9491001750	BEARING	1	1	1	1	1	1		
6	2	X1280995160	STARTER KIT	1	1	1	1	1	1		
7	3	X0283005381	CLUTCH ASSY	1	1	1	1	1	1		
8	3	X9491704030	SPRING	1	1	1	1	1	1		
9	3	X9490721130	RING	1	1	1	1	1	1		
10	3	X0283270160	RETAINER	1	1	1	1	1	1		
11	3	X0280210250	NUT	1	1	1	1	1	1		
12	3	X9490721120	RING	1	1	1	1	1	1		
13	3	X0283810071	SHAFT	1	1	1	1	1	1		
14	3	X0283716640	PINION, STARTER	1	1	1	1	1	1		
15	2	X1534002321	SWITCH ASSY	1	1	1	1	1	1		
16	3	X0280650250	BUSH	1	1	1	1	1	1		
17	3	X0535050290	COVER	1	1	1	1	1	1		
18	3	X0534040240	PACKING	1	1	1	1	1	1		
19	3	X9490474440	BOLT	1	1	1	1	1	1		
20	3	X0536600443	PLUNGER	1	1	1	1	1	1		
21	2	X0285100500	HOLDER	1	1	1	1	1	1		
22	2	X0285017860	FRAME	1	1	1	1	1	1		
23	2	X0283711500	PINION	1	1	1	1	1	1		
24	2	X0283270171	RETAINER	1	1	1	1	1	1		
25	2	X9490200600	WASHER	1	1	1	1	1	1		
26	2	X0280625790	COVER	1	1	1	1	1	1		
27	2	X0283060070	ROLLER	5	5	5	5	5	5		
28	2	X0280630030	RETAINER	1	1	1	1	1	1		
29	2	X9017010061	NUT	1	1	1	1	1	1		
30	2	X9490564480	NUT	1	1	1	1	1	1		
31	2	X9490423741	BOLT, THROUGH	2	2	2	2	2	2		
32	2	X9490441912	BOLT	1	1	1	1	1	1		
33	2	X9490076530	SCREW	2	2	2	2	2	2		
34	2	X9491704070	SPRING	1	1	1	1	1	1		
35	2	X9491200240	BALL	1	1	1	1	1	1		
36	2	X9490065080	SCREW	3	3	3	3	3	3		
37	2	X1284018620	HOUSING, STARTER	1	1	1	1	1	1		
38	2	X9491704040	SPRING	1	1	1	1	1	1		
39	2	X9490076850	SCREW	3	3	3	3	3	3		
40	2	X1280995610	STARTER KIT	1	1	1	1	1	1		
41	3	X0535117630	BOLT	1	1	1	1	1	1		
42	3	X9490505650	NUT	1	1	1	1	1	1		
43	3	X9490119320	WASHER	1	1	1	1	1	1		
44	3	X0534497181	BUSH	1	1	1	1	1	1		
45	3	X0534497510	BUSH	1	1	1	1	1	1		
46	3	X0535137770	PLATE	1	1	1	1	1	1		
47	2	X9025810001	WASHER, SPRING	1	1	1	1	1	1		
48	2	X0536807770	WIRE ASSY	1	1	1	1	1	1		
49	1	119773-77030	COVER	1	1	1	1	1	1		
50	1	22117-120000	WASHER, 12	2	2	2	2	2	2		
51	1	26116-120452	BOLT, M12X 45 PLATED	2	2	2	2	2	2		

N:Old $\overset{\text{Yes}}{\underset{\text{No}}{\leftrightarrow}}$ New, Q:Old $\overset{\text{No}}{\underset{\text{Yes}}{\leftrightarrow}}$ New, R:Old $\overset{\text{Yes}}{\underset{\text{Yes}}{\leftrightarrow}}$ New, S:Old $\overset{\text{No}}{\underset{\text{No}}{\leftrightarrow}}$ New, W:Add, Z:Discontinued, F:Interchangeable by set, K:Q'ty Change

++ CONTINUE ++

Copyright (C) YANMAR CO., LTD. All RightsReserved.

Fig.57. STARTING MOTOR

(A)=6LP(A)-DTE(P
(B)=6LP(A-DTZE(P
(C)=6LP(A-DTZEP1
(D)=6LP(A)-STE(P
(E)=6LP(A-STZE(P
(F)=6LP(A-STZEP1

Y00R5420

Fig.57 スターティングモータ
STARTING MOTOR

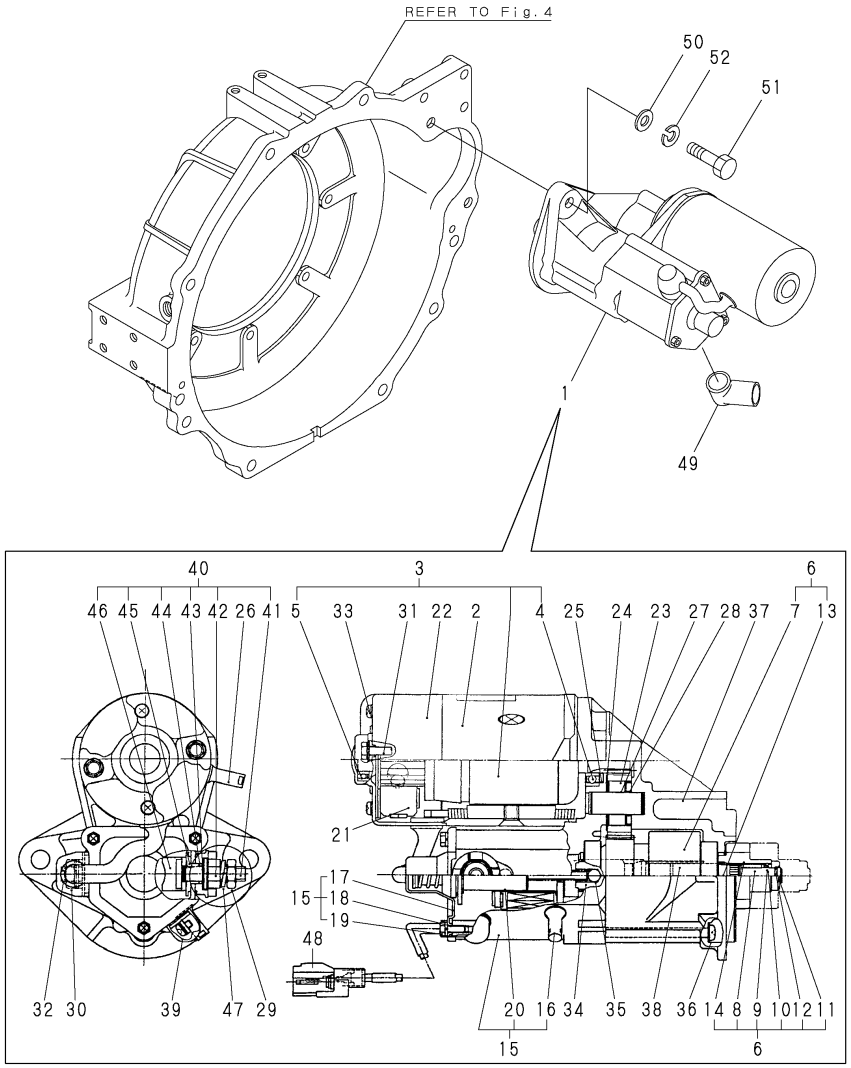

No.	Lev.	Parts No.	Description	Q'ty (A)	(B)	(C)	(D)	(E)	(F)	I	R
52	1	22217-120000	WASHER, SPRING 12	2	2	2	2	2	2		

N:Old ◄Yes/No► New, Q:Old ◄No/Yes► New, R:Old ◄Yes/Yes► New, S:Old ◄No/No► New, W:Add, Z:Discontinued, F:Interchangeable by set, K:Q'ty Change

Copyright (C) YANMAR CO., LTD. All RightsReserved.

Fig.58. GENERATOR

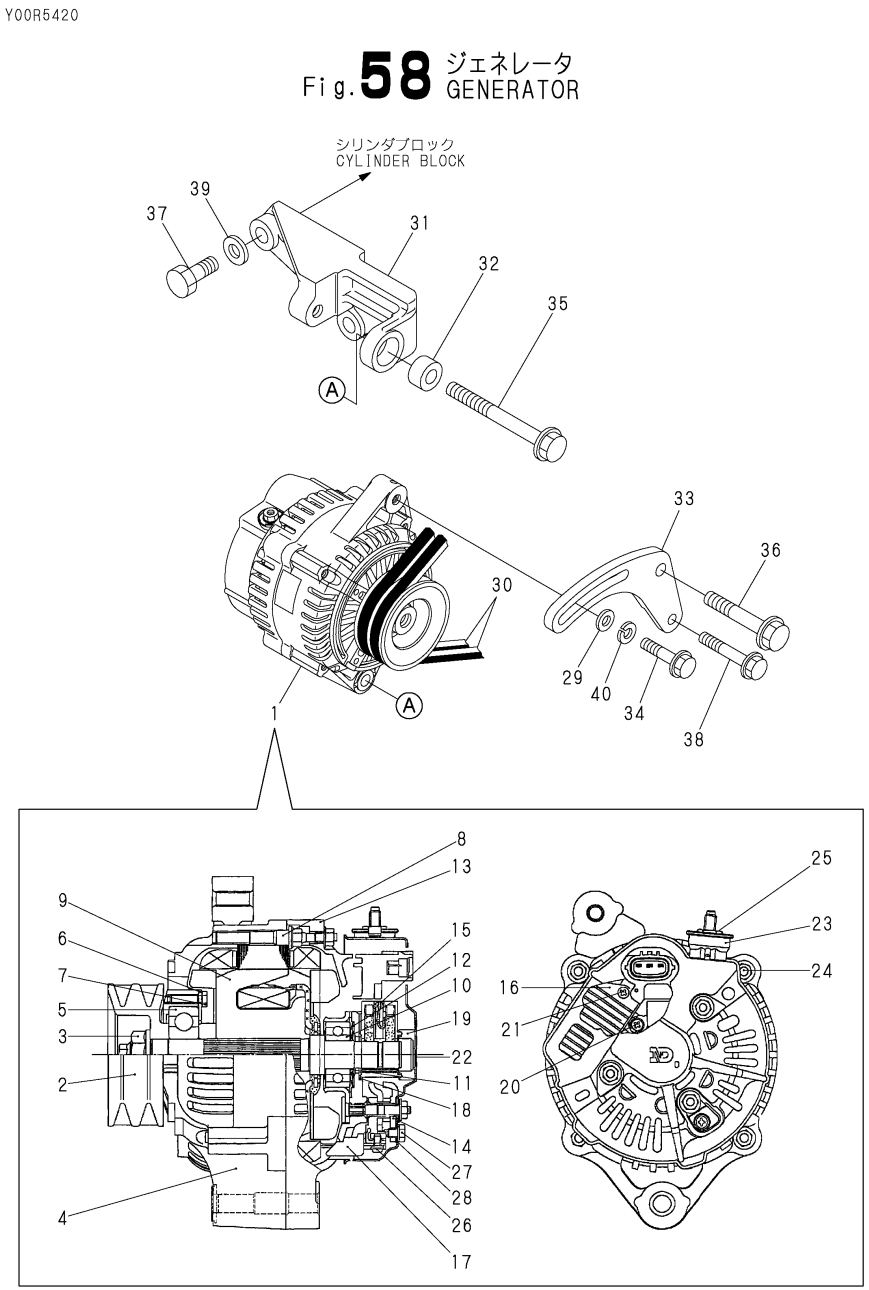

(A)=6LP(A)-DTE(P (D)=6LP(A)-STE(P
(B)=6LP(A-DTZE(P (E)=6LP(A-STZE(P
(C)=6LP(A-DTZEP1 (F)=6LP(A-STZEP1

No.	Lev.	Parts No.	Description	Q'ty (A)	(B)	(C)	(D)	(E)	(F)	I	R
1	1	119773-77200	ALTERNATOR, 12V-80A	1	1	1	1	1	1		
2	2	X0210416680	PULLEY	1	1	1	1	1	1		
3	2	X9490562520	NUT	1	1	1	1	1	1		
4	2	X0214006030	FRAME ASSY, DRIVE	1	1	1	1	1	1		
5	3	X9491004370	BEARING, BALL	1	1	1	1	1	1		
6	3	X0214110570	PLATE, RETAINER	1	1	1	1	1	1		
7	3	X9490065590	SCREW	4	4	4	4	4	4		
8	3	X9490432000	STUD	4	4	4	4	4	4		
9	2	X0212005000	ROTOR ASSY	1	1	1	1	1	1		
10	3	X9491002790	BEARING, BALL	1	1	1	1	1	1		
11	3	X0215060070	COVER, BEARING	1	1	1	1	1	1		
12	2	X0215420160	WASHER	1	1	1	1	1	1		
13	2	X0215016550	FRAME	1	1	1	1	1	1		
14	2	X0215804510	HOLDER ASSY	1	1	1	1	1	1		
15	2	X0216202720	HOLDER	1	1	1	1	1	1		
16	2	X1260001940	REGULATOR	1	1	1	1	1	1		
17	2	X0216051970	BUSH	4	4	4	4	4	4		
18	2	X0216260190	SEAL	1	1	1	1	1	1		
19	2	X0216260250	SEAL	1	1	1	1	1	1		
20	2	X9490065460	SCREW	3	3	3	3	3	3		
21	2	X9490075110	SCREW	2	2	2	2	2	2		
22	2	X0215512260	COVER, END	1	1	1	1	1	1		
23	2	X0216052070	BUSH	1	1	1	1	1	1		
24	2	X9490562481	NUT	7	7	7	7	7	7		
25	2	X9490563080	NUT	1	1	1	1	1	1		
26	2	X9490076280	SCREW	4	4	4	4	4	4		
27	2	X9490066401	SCREW	1	1	1	1	1	1		
28	2	X0216025230	PLATE	1	1	1	1	1	1		
29	1	121236-77340	SPACER	1	1	1	1	1	1		
30	1	119773-77251	V-BELT	2	2	2	2	2	2		
31	1	119773-77320	BRACKET	1	1	1	1	1	1		
32	1	119773-77340	COLLAR	1	1	1	1	1	1		
33	1	119773-77350	ADJUSTER, BELT	1	1	1	1	1	1		
34	1	26106-080352	BOLT, M8X 35 PLATED	1	1	1	1	1	1		
35	1	26106-100952	BOLT, M10X 95 PLATED	1	1	1	1	1	1		
36	1	26136-100602	BOLT, M10X 60 PLATED	1	1	1	1	1	1		
37	1	26156-120402	BOLT, M12X 40 PLATED	2	2	2	2	2	2		
38	1	26106-080552	BOLT, M8X 55 PLATED	1	1	1	1	1	1		
39	1	22117-120000	WASHER, 12	2	2	2	2	2	2		
40	1	22213-080000	WASHER, SPRING 8	1	1	1	1	1	1		

N:Old $\frac{\text{Yes}}{\text{No}}$ New, Q:Old $\frac{\text{No}}{\text{Yes}}$ New, R:Old $\frac{\text{Yes}}{\text{Yes}}$ New, S:Old $\frac{\text{No}}{\text{No}}$ New, W:Add, Z:Discontinued, F:Interchangeable by set, K:Q'ty Change

Copyright (C) YANMAR CO., LTD. All RightsReserved.

Fig.59. INSTRUMENT PANEL(B-TYPE,OPTIONAL)

Y00R5420

Fig.59 計器盤（Bタイプ，オプション）
INSTRUMENT PANEL(B-TYPE,OPTIONAL)

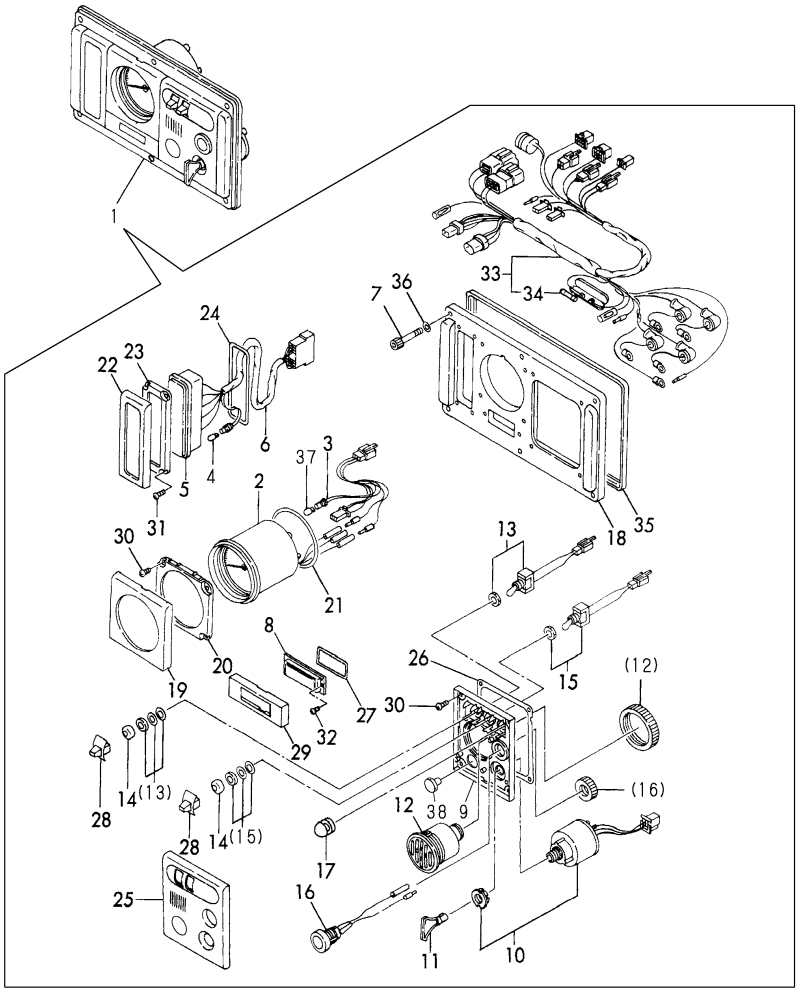

(A)=6LP(A)-DTE(P (D)=6LP(A)-STE(P
(B)=6LP(A-DTZE(P (E)=6LP(A-STZE(P
(C)=6LP(A-DTZEP1 (F)=6LP(A-STZEP1

No.	Lev.	Parts No.	Description	Q'ty (A)	(B)	(C)	(D)	(E)	(F)	I	R
1	1	119773-91131	PANEL, INSTRUMENT B	1	1	1	1	1	1		
2	2	119773-91200	METER, TACHO./HOUR	1	1	1	1	1	1		
3	2	129574-91870	HARNESS, WIRE	1	1	1	1	1	1		
4	2	124617-91980	BULB, 12V-1.7W	6	6	6	6	6	6		
5	2	119773-91261	BOX	1	1	1	1	1	1		
6	2	119773-91240	HARNESS, WIRE	1	1	1	1	1	1		
7	2	127687-91870	BOLT, M6X35	6	6	6	6	6	6		
8	2	129170-91650	COVER	1	1	1	1	1	1		
9	2	129574-91410	BRACKET, SWITCH	1	1	1	1	1	1		
10	2	121575-91250	SWITCH, KEY	1	1	1	1	1	1		
11	2	123482-91291	KEY	1	1	1	1	1	1		
12	2	104271-91352	BUZZER	1	1	1	1	1	1		
13	2	129170-91800	SWITCH	1	1	1	1	1	1		
14	2	129574-91780	CAP, RUBBER	2	2	2	2	2	2		
15	2	129574-91790	SWITCH	1	1	1	1	1	1		
16	2	129470-91190	SWITCH, STOP	1	1	1	1	1	1		
17	2	129170-91810	COVER	1	1	1	1	1	1		
18	2	128391-91930	PANEL	1	1	1	1	1	1		
19	2	129574-91620	BEZEL	1	1	1	1	1	1		
20	2	129574-91420	BRACKET	1	1	1	1	1	1		
21	2	129574-91720	GASKET	1	1	1	1	1	1		
22	2	128391-91640	BEZEL	1	1	1	1	1	1		
23	2	128391-91440	PLATE	1	1	1	1	1	1		
24	2	128391-91740	GASKET	1	1	1	1	1	1		
25	2	129170-91610	BEZEL	1	1	1	1	1	1		
26	2	129574-91710	GASKET	1	1	1	1	1	1		
27	2	129574-91750	GASKET	1	1	1	1	1	1		
28	2	129574-91770	KNOB	2	2	2	2	2	2		
29	2	129574-91650	BEZEL	1	1	1	1	1	1		
30	2	127692-91410	SCREW	8	8	8	8	8	8		
31	2	127692-91440	SCREW	4	4	4	4	4	4		
32	2	127692-91450	SCREW	2	2	2	2	2	2		
33	2	119773-91141	HARNESS, WIRE	1	1	1	1	1	1		
34	3	124617-91990	FUSE	1	1	1	1	1	1		
35	2	128391-91700	GASKET	1	1	1	1	1	1		
36	2	127687-91880	WASHER	6	6	6	6	6	6		
37	2	124617-91980	BULB, 12V-1.7W	1	1	1	1	1	1		
38	2	129574-91760	COVER	1	1	1	1	1	1		

N:Old $\xleftarrow[\text{No}]{\text{Yes}}$ New, Q:Old $\xleftarrow[\text{Yes}]{\text{No}}$ New, R:Old $\xleftarrow[\text{Yes}]{\text{Yes}}$ New, S:Old $\xleftarrow[\text{No}]{\text{No}}$ New, W:Add, Z:Discontinued, F:Interchangeable by set, K:Q'ty Change

Copyright (C) YANMAR CO., LTD. All RightsReserved.

Fig.60. INSTRUMENT PANEL(C-TYPE,ONPTONAL)

(A)=6LP(A)-DTE(P (D)=6LP(A)-STE(P
(B)=6LP(A-DTZE(P (E)=6LP(A-STZE(P
(C)=6LP(A-DTZEP1 (F)=6LP(A-STZEP1

Y00R5420

Fig.60 計器盤（Cタイプ，オプション）
INSTRUMENT PANEL(C-TYPE,OPTIONAL)

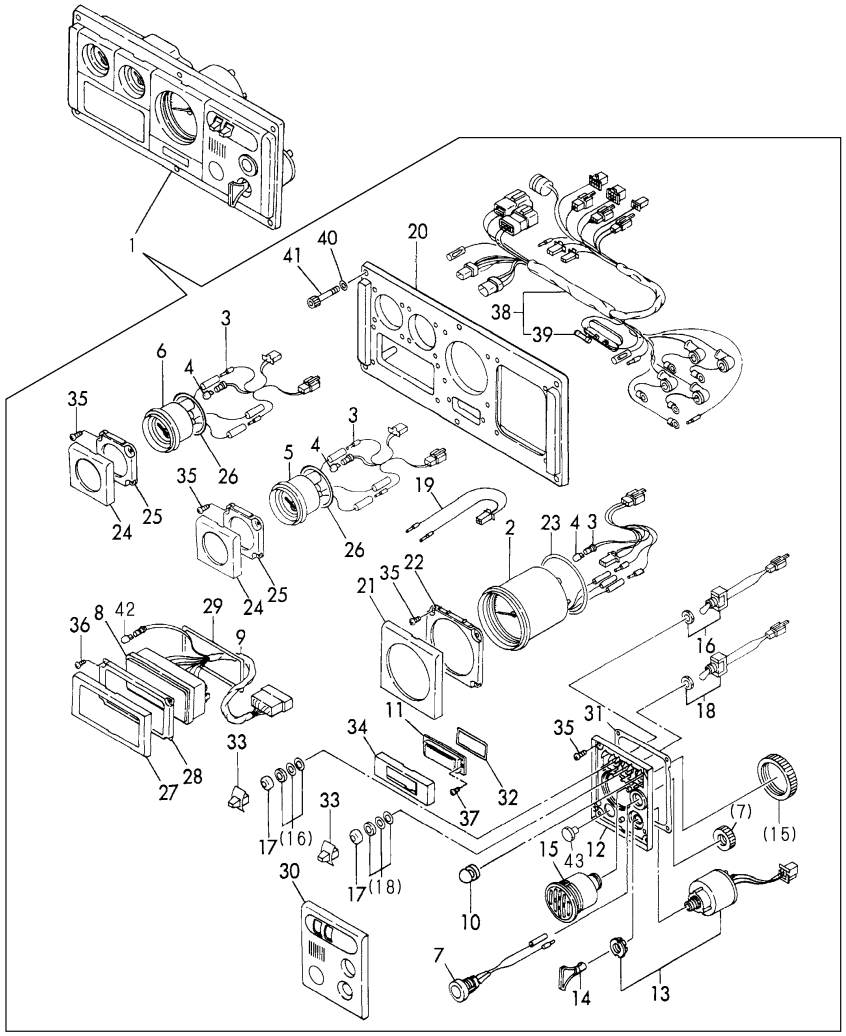

No.	Lev.	Parts No.	Description	Q'ty (A)	(B)	(C)	(D)	(E)	(F)	I	R
1	1	119773-91162	PANEL, INSTRUMENT C	1	1	1	1	1	1		
2	2	119773-91200	METER, TACHO./HOUR	1	1	1	1	1	1		
3	2	129574-91870	HARNESS, WIRE	3	3	3	3	3	3		
4	2	124617-91980	BULB, 12V-1.7W	3	3	3	3	3	3		
5	2	129574-91210	METER	1	1	1	1	1	1		
6	2	129574-91221	METER	1	1	1	1	1	1		
7	2	129470-91190	SWITCH, STOP	1	1	1	1	1	1		
8	2	119773-91281	BOX	1	1	1	1	1	1		
9	2	119773-91231	HARNESS, WIRE	1	1	1	1	1	1		
10	2	129170-91810	COVER	1	1	1	1	1	1		
11	2	129170-91650	COVER	1	1	1	1	1	1		
12	2	129574-91410	BRACKET, SWITCH	1	1	1	1	1	1		
13	2	121575-91250	SWITCH, KEY	1	1	1	1	1	1		
14	2	123482-91291	KEY	1	1	1	1	1	1		
15	2	104271-91352	BUZZER	1	1	1	1	1	1		
16	2	129170-91800	SWITCH	1	1	1	1	1	1		
17	2	129574-91780	CAP, RUBBER	2	2	2	2	2	2		
18	2	129574-91790	SWITCH	1	1	1	1	1	1		
19	2	129170-91890	HARNESS, WIRE	1	1	1	1	1	1		
20	2	129170-91930	PANEL	1	1	1	1	1	1		
21	2	129574-91620	BEZEL	1	1	1	1	1	1		
22	2	129574-91420	BRACKET	1	1	1	1	1	1		
23	2	129574-91720	GASKET	1	1	1	1	1	1		
24	2	129574-91630	BEZEL	2	2	2	2	2	2		
25	2	129574-91430	BRACKET	2	2	2	2	2	2		
26	2	129574-91730	GASKET	2	2	2	2	2	2		
27	2	129574-91640	BEZEL	1	1	1	1	1	1		
28	2	129574-91440	BRACKET	1	1	1	1	1	1		
29	2	129574-91740	GASKET	1	1	1	1	1	1		
30	2	129170-91610	BEZEL	1	1	1	1	1	1		
31	2	129574-91710	GASKET	1	1	1	1	1	1		
32	2	129574-91750	GASKET	1	1	1	1	1	1		
33	2	129574-91770	KNOB	2	2	2	2	2	2		
34	2	129574-91650	BEZEL	1	1	1	1	1	1		
35	2	127692-91410	SCREW	16	16	16	16	16	16		
36	2	127692-91440	SCREW	4	4	4	4	4	4		
37	2	127692-91450	SCREW	2	2	2	2	2	2		
38	2	119773-91171	HARNESS, WIRE	1	1	1	1	1	1		
39	3	124617-91990	FUSE	1	1	1	1	1	1		
40	2	127687-91880	WASHER	6	6	6	6	6	6		
41	2	127687-91870	BOLT, M6X35	6	6	6	6	6	6		
42	2	124617-91980	BULB, 12V-1.7W	8	8	8	8	8	8		
43	2	129574-91760	COVER	1	1	1	1	1	1		

N:Old ◄Yes/No► New, Q:Old ◄No/Yes► New, R:Old ◄Yes/Yes► New, S:Old ◄No/No► New, W:Add, Z:Discontinued, F:Interchangeable by set, K:Q'ty Change

Copyright (C) YANMAR CO., LTD. All RightsReserved.

Fig.61. INSTRUMENT PANEL(D-TYPE,ONPTONAL)

(A)=6LP(A)-DTE(P
(B)=6LP(A-DTZE(P
(C)=6LP(A-DTZEP1
(D)=6LP(A)-STE(P
(E)=6LP(A-STZE(P
(F)=6LP(A-STZEP1

Y00R5420

Fig. 61 計器盤（Dタイプ，オプション）
INSTRUMENT PANEL(D-TYPE,OPTIONAL)

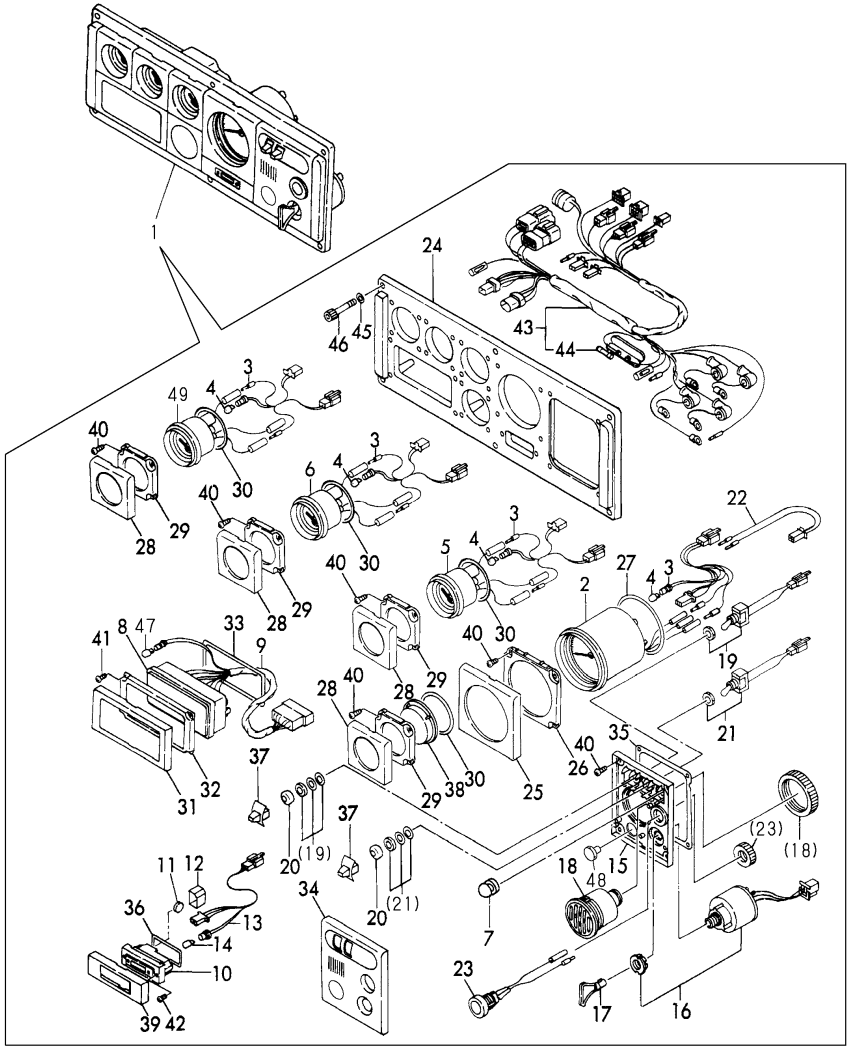

No.	Lev.	Parts No.	Description	Q'ty (A)	(B)	(C)	(D)	(E)	(F)	I	R
1	1	119773-91192	PANEL, INSTRUMENT D	1	1	1	1	1	1		
2	2	119773-91200	METER, TACHO./HOUR	1	1	1	1	1	1		
3	2	129574-91870	HARNESS, WIRE	4	4	4	4	4	4		
4	2	124617-91980	BULB, 12V-1.7W	4	4	4	4	4	4		
5	2	129574-91210	METER	1	1	1	1	1	1		
6	2	129574-91221	METER	1	1	1	1	1	1		
7	2	129170-91810	COVER	1	1	1	1	1	1		
8	2	119773-91281	BOX	1	1	1	1	1	1		
9	2	119773-91231	HARNESS, WIRE	1	1	1	1	1	1		
10	2	129574-91240	CLOCK	1	1	1	1	1	1		
11	2	127620-91250	CELL	1	1	1	1	1	1		
12	2	129574-91490	HOLDER	1	1	1	1	1	1		
13	2	129574-91880	HARNESS, WIRE	1	1	1	1	1	1		
14	2	120147-91760	BULB	1	1	1	1	1	1		
15	2	129574-91410	BRACKET, SWITCH	1	1	1	1	1	1		
16	2	121575-91250	SWITCH, KEY	1	1	1	1	1	1		
17	2	123482-91291	KEY	1	1	1	1	1	1		
18	2	104271-91352	BUZZER	1	1	1	1	1	1		
19	2	129170-91800	SWITCH	1	1	1	1	1	1		
20	2	129574-91780	CAP, RUBBER	2	2	2	2	2	2		
21	2	129574-91790	SWITCH	1	1	1	1	1	1		
22	2	129574-91890	HARNESS, WIRE	1	1	1	1	1	1		
23	2	129470-91190	SWITCH, STOP	1	1	1	1	1	1		
24	2	129574-91930	PANEL	1	1	1	1	1	1		
25	2	129574-91620	BEZEL	1	1	1	1	1	1		
26	2	129574-91420	BRACKET	1	1	1	1	1	1		
27	2	129574-91720	GASKET	1	1	1	1	1	1		
28	2	129574-91630	BEZEL	4	4	4	4	4	4		
29	2	129574-91430	BRACKET	4	4	4	4	4	4		
30	2	129574-91730	GASKET	4	4	4	4	4	4		
31	2	129574-91640	BEZEL	1	1	1	1	1	1		
32	2	129574-91440	BRACKET	1	1	1	1	1	1		
33	2	129574-91740	GASKET	1	1	1	1	1	1		
34	2	129170-91610	BEZEL	1	1	1	1	1	1		
35	2	129574-91710	GASKET	1	1	1	1	1	1		
36	2	129574-91750	GASKET	1	1	1	1	1	1		
37	2	129574-91770	KNOB	2	2	2	2	2	2		
38	2	129574-91600	COVER	1	1	1	1	1	1		
39	2	129574-91650	BEZEL	1	1	1	1	1	1		
40	2	127692-91410	SCREW	24	24	24	24	24	24		
41	2	127692-91440	SCREW	4	4	4	4	4	4		
42	2	127692-91450	SCREW	2	2	2	2	2	2		
43	2	119773-91221	HARNESS, WIRE	1	1	1	1	1	1		
44	3	124617-91990	FUSE	1	1	1	1	1	1		
45	2	127687-91880	WASHER	6	6	6	6	6	6		
46	2	127687-91870	BOLT, M6X35	6	6	6	6	6	6		
47	2	124617-91980	BULB, 12V-1.7W	8	8	8	8	8	8		
48	2	129574-91760	COVER	1	1	1	1	1	1		
49	2	129574-91311	METER	1	1	1	1	1	1		

N:Old $\overset{\text{Yes}}{\underset{\text{No}}{\leftrightarrow}}$ New, Q:Old $\overset{\text{No}}{\underset{\text{Yes}}{\leftrightarrow}}$ New, R:Old $\overset{\text{Yes}}{\underset{\text{Yes}}{\leftrightarrow}}$ New, S:Old $\overset{\text{No}}{\underset{\text{No}}{\leftrightarrow}}$ New, W:Add, Z:Discontinued, F:Interchangeable by set, K:Q'ty Change

Copyright (C) YANMAR CO., LTD. All RightsReserved.

Fig.62. WIRE HARNESS & SENSOR

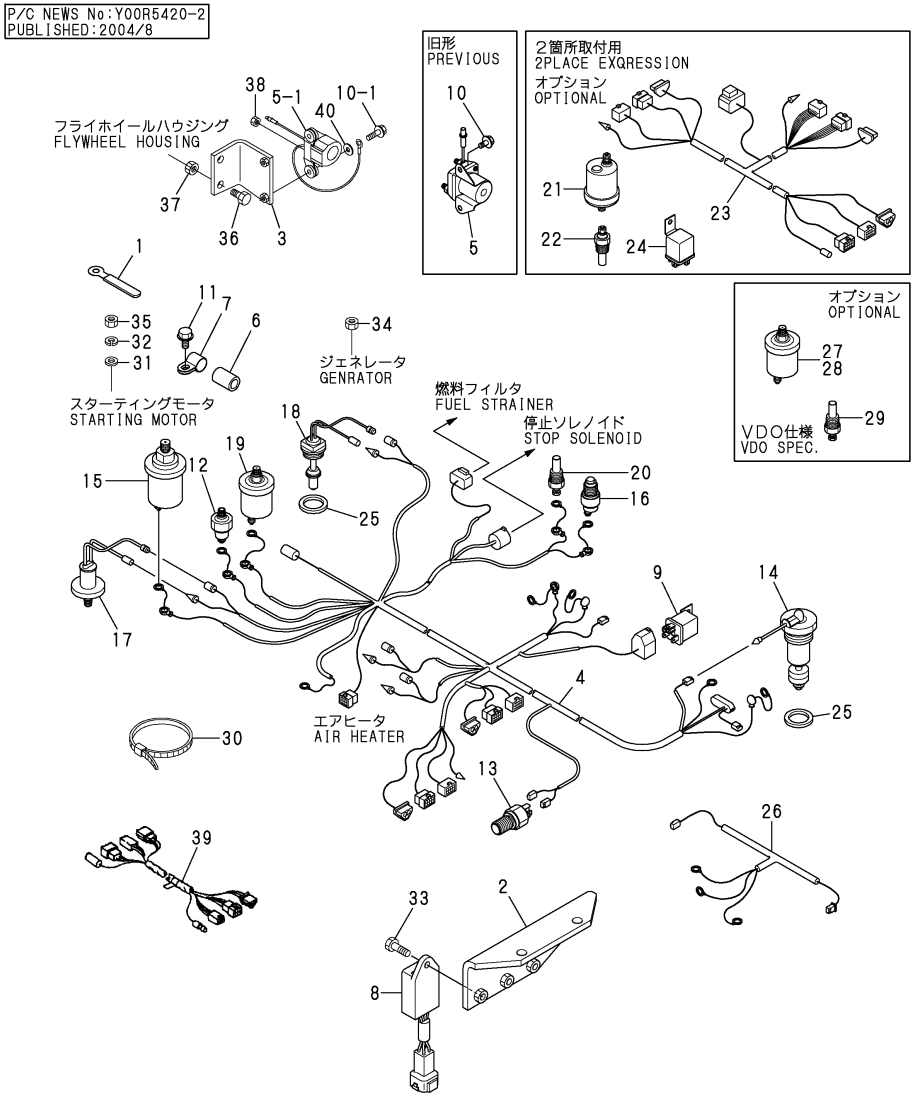

(A)=6LP(A)-DTE(P (D)=6LP(A)-STE(P
(B)=6LP(A-DTZE(P (E)=6LP(A-STZE(P
(C)=6LP(A-DTZEP1 (F)=6LP(A-STZEP1

No.	Lev.	Parts No.	Description	Q'ty (A)	(B)	(C)	(D)	(E)	(F)	I	R
1	1	105430-67110	CLAMP, CORD	1	1	1	1	1	1		
2	1	119773-77551	BRACKET, RELAY	1	1	1	1	1	1		
3	1	119773-77570	BRACKET, RELAY	1	1	1	1	1	1		
4	1	119778-77812	HARNESS, WIRE	1	1	1	1	1	1		
5	1	129490-77910	RELAY, STARTER	1	1	1	1	1	1		
5-1	1	119575-77510	RELAY, STARTER	1	1	1	1	1	1	F	1
	(A=*2004.06)	(B=*2004.06)	(C=*2004.06)	(D=*2004.06)		(E=*2004.06)		(F=*2004.06)			
6	1	124770-77940	PROTECTOR	1	1	1	1	1	1		
7	1	124070-77950	CLAMP	1	1	1	1	1	1		
8	1	119773-91400	CONTROLLER	3	3	3	3	3	3		
9	1	119773-91850	RELAY	1	1	1	1	1	1		
10	1	26106-060122	BOLT, M6X 12 PLATED	2	2	2	2	2	2		
10-1	1	26106-060202	BOLT, M6X 20 PLATED	2	2	2	2	2	2	F	1
	(A=*2004.06)	(B=*2004.06)	(C=*2004.06)	(D=*2004.06)		(E=*2004.06)		(F=*2004.06)			
11	1	26106-080162	BOLT, M8X 16 PLATED	1	1	1	1	1	1		
12	1	124060-39452	SWITCH, 0.2KG	1	1	1	1	1	1		
13	1	128170-91160	SENSOR	1	1	1	1	1	1		
14	1	127610-91221	SWITCH, FLOAT	1	1	1	1	1	1		
15	1	119773-91301	SENSOR	1	1	1	1	1	1		
16	1	127610-91350	SWITCH, 95	1	1	1	1	1	1		
17	1	119773-91380	SWITCH, PRESSURE	1	1	1	1	1	1		
18	1	119773-91420	SWITCH	1	1	1	1	1	1		
19	1	119773-91501	SENSOR	1	1	1	1	1	1		
20	1	144626-91570	SENDER UNIT	1	1	1	1	1	1		
21	1	129574-91561	SENSOR	1	1	1	1	1	1		
22	1	129574-91570	SENSOR	1	1	1	1	1	1		
23	1	129574-77980	HARNESS, WIRE	1	1	1	1	1	1		
24	1	119773-91850	RELAY	1	1	1	1	1	1		
25	1	22190-270002	WASHER, SEAL 27	2	2	2	2	2	2		
26	1	119778-91500	HARNESS, WIRE		1	1		1	1		
27	1	119773-91600	SENDER	1	1	1	1	1	1		
28	1	119773-91650	SENSOR	1	1	1	1	1	1		
29	1	119773-91700	SENDER	1	1	1	1	1	1		
30	1	121750-59890	BAND, 140	5	5	5	5	5	5		
31	1	22117-100000	WASHER, 10	1	1	1	1	1	1		
32	1	22217-100000	WASHER, SPRING 10	1	1	1	1	1	1		
33	1	26106-060162	BOLT, M6X 16 PLATED	3	3	3	3	3	3		
34	1	26716-060002	NUT, M6	1	1	1	1	1	1		
35	1	26716-100002	NUT, M10	1	1	1	1	1	1		
36	1	26106-100502	BOLT, M10X 50 PLATED	2	2	2	1	1	1		
37	1	26306-100002	NUT, M10	2	2	2	1	1	1		
38	1	26366-060002	NUT, M6	2	2	2	2	2	2		
39	1	129574-77720	HARNESS, WIRE 6M	1	1	1	1	1	1		
39A	1	129574-77710	HARNESS, WIRE 4M	1	1	1	1	1	1		
40	1	183350-55130	WASHER	2	2	2	2	2	2	W	1
	(A=*2004.06)	(B=*2004.06)	(C=*2004.06)	(D=*2004.06)		(E=*2004.06)		(F=*2004.06)			

Remarks
(1)INTERCHANGEABLE BY SIMULTANEOUS REPLACEMENT WITH REF.NO.5-1,10-1, 40.

N:Old $\frac{\text{Yes}}{\text{No}}$ New, Q:Old $\frac{\text{No}}{\text{Yes}}$ New, R:Old $\frac{\text{Yes}}{\text{Yes}}$ New, S:Old $\frac{\text{No}}{\text{No}}$ New, W:Add, Z:Discontinued, F:Interchangeable by set, K:Q'ty Change

Copyright (C) YANMAR CO., LTD. All RightsReserved.

Fig.63. SENSOR MOUNT

(A)=6LP(A)-DTE(P
(B)=6LP(A-DTZE(P
(C)=6LP(A-DTZEP1
(D)=6LP(A)-STE(P
(E)=6LP(A-STZE(P
(F)=6LP(A-STZEP1

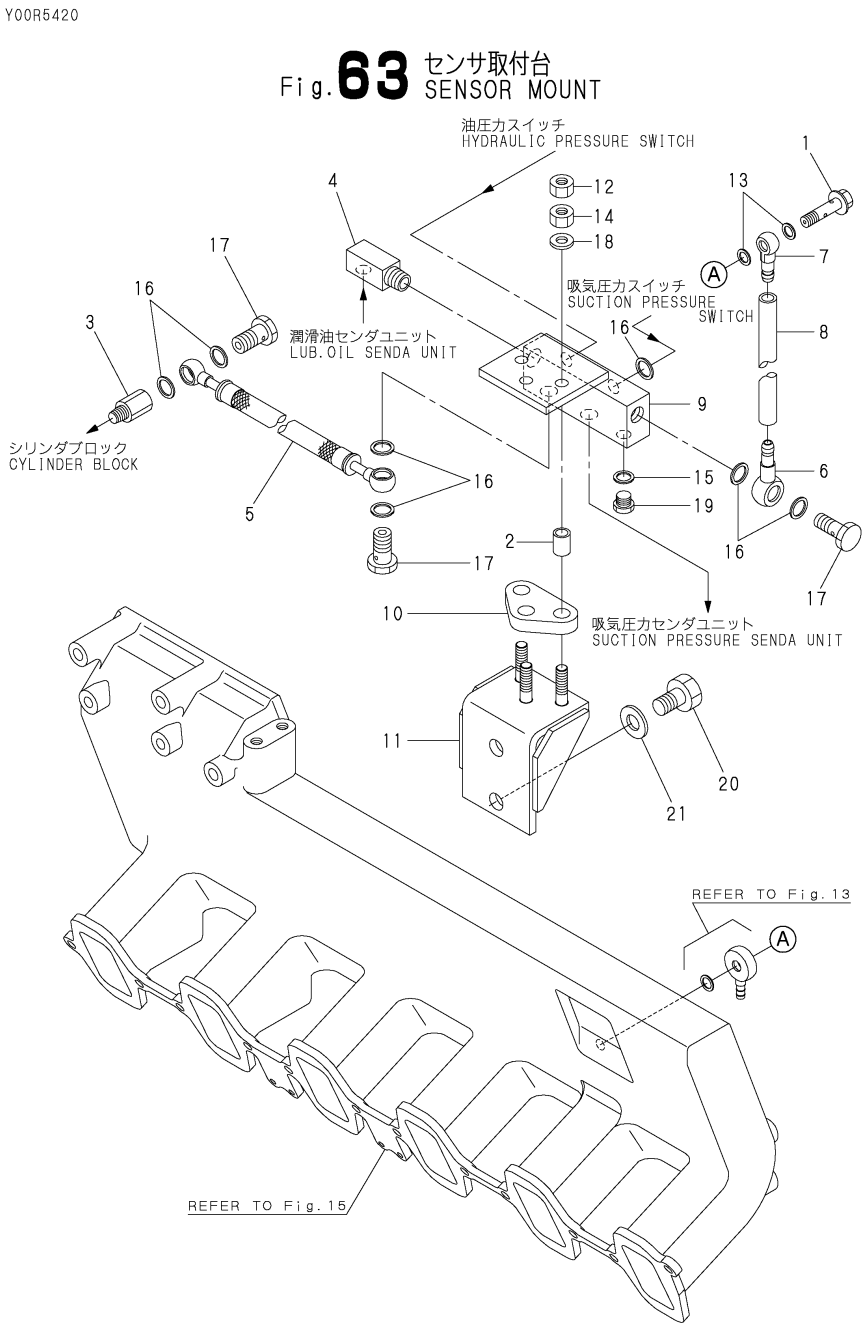

No.	Lev.	Parts No.	Description	Q'ty (A)	(B)	(C)	(D)	(E)	(F)	I	R
1	1	127616-11960	BOLT	1	1	1	1	1	1		
2	1	119773-91050	COLLAR	3	3	3	3	3	3		
3	1	114354-39600	JOINT, PIPE	1	1	1	1	1	1		
4	1	123482-39670	DAMPER	1	1	1	1	1	1		
5	1	119773-39801	PIPE ASSY, OIL	1	1	1	1	1	1		
6	1	104264-59020	JOINT	1	1	1	1	1	1		
7	1	104264-59030	JOINT, PIPE 8	1	1	1	1	1	1		
8	1	119773-18500	PIPE, FUEL	1	1	1	1	1	1		
9	1	119773-91011	BRACKET	1	1	1	1	1	1		
10	1	119773-91021	ABSORBER	1	1	1	1	1	1		
11	1	119773-91040	BRACKET	1	1	1	1	1	1		
12	1	26716-080002	NUT, M8	3	3	3	3	3	3		
13	1	23414-080000	GASKET, 8X1.0	2	2	2	2	2	2		
14	1	26756-080002	NUT, LOCK M8	3	3	3	3	3	3		
15	1	23414-100014	GASKET, 10X1.0	1	1	1	1	1	1		
16	1	23414-120000	GASKET, 12X1.0	7	7	7	7	7	7		
17	1	23851-060000	JOINT BOLT 6	3	3	3	3	3	3		
18	1	22137-080000	WASHER, 8	3	3	3	3	3	3		
19	1	23887-100002	PLUG, 10	1	1	1	1	1	1		
20	1	26156-120202	BOLT, M12X 20 PLATED	2	2	2	2	2	2		
21	1	22117-120000	WASHER, 12	2	2	2	2	2	2		

N:Old $\xleftarrow[\text{No}]{\text{Yes}}$ New, Q:Old $\xleftarrow[\text{Yes}]{\text{No}}$ New, R:Old $\xleftarrow[\text{Yes}]{\text{Yes}}$ New, S:Old $\xleftarrow[\text{No}]{\text{No}}$ New, W:Add, Z:Discontinued, F:Interchangeable by set, K:Q'ty Change

Copyright (C) YANMAR CO., LTD. All RightsReserved.

Fig.64. TOOL(OPTIONAL)

(A)=6LP(A)-DTE(P
(B)=6LP(A-DTZE(P
(C)=6LP(A-DTZEP1
(D)=6LP(A)-STE(P
(E)=6LP(A-STZE(P
(F)=6LP(A-STZEP1

Y00R5420

Fig.64 工具（オプション）
TOOL (OPTIONAL)

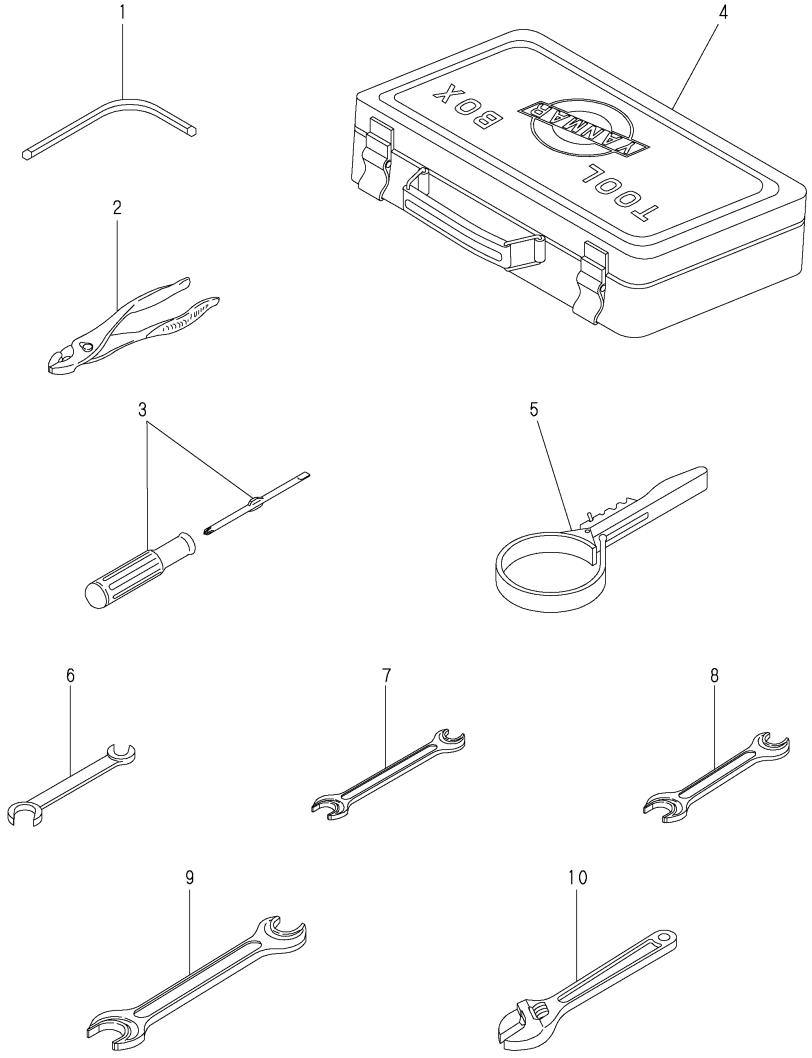

No.	Lev.	Parts No.	Description	Q'ty (A)	(B)	(C)	(D)	(E)	(F)	I	R
1	1	177040-09050	WRENCH	1	1	1	1	1	1		
2	1	189010-92020	PLIER	1	1	1	1	1	1		
3	1	104200-92350	DRIVER, SCREW	1	1	1	1	1	1		
4	1	122210-92600	BOX, TOOL	1	1	1	1	1	1		
5	1	148633-92350	WRENCH	1	1	1	1	1	1		
6	1	28110-100130	SPANNER, 10X13	1	1	1	1	1	1		
7	1	28110-120140	SPANNER, 12X14	1	1	1	1	1	1		
8	1	28110-170190	SPANNER, 17X19	1	1	1	1	1	1		
9	1	28110-220240	SPANNER, 22X24	1	1	1	1	1	1		
10	1	28120-002000	WRENCH, 200	1	1	1	1	1	1		

N:Old ←Yes/No→ New, Q:Old ←No/Yes→ New, R:Old ←Yes/Yes→ New, S:Old ←No/No→ New, W:Add, Z:Discontinued, F:Interchangeable by set, K:Q'ty Change

Copyright (C) YANMAR CO., LTD. All RightsReserved.

Fig.65. SPARE PART(OPTINAL)

P/C NEWS No.:Y00R5420-4
PUBLISHED :2005/5

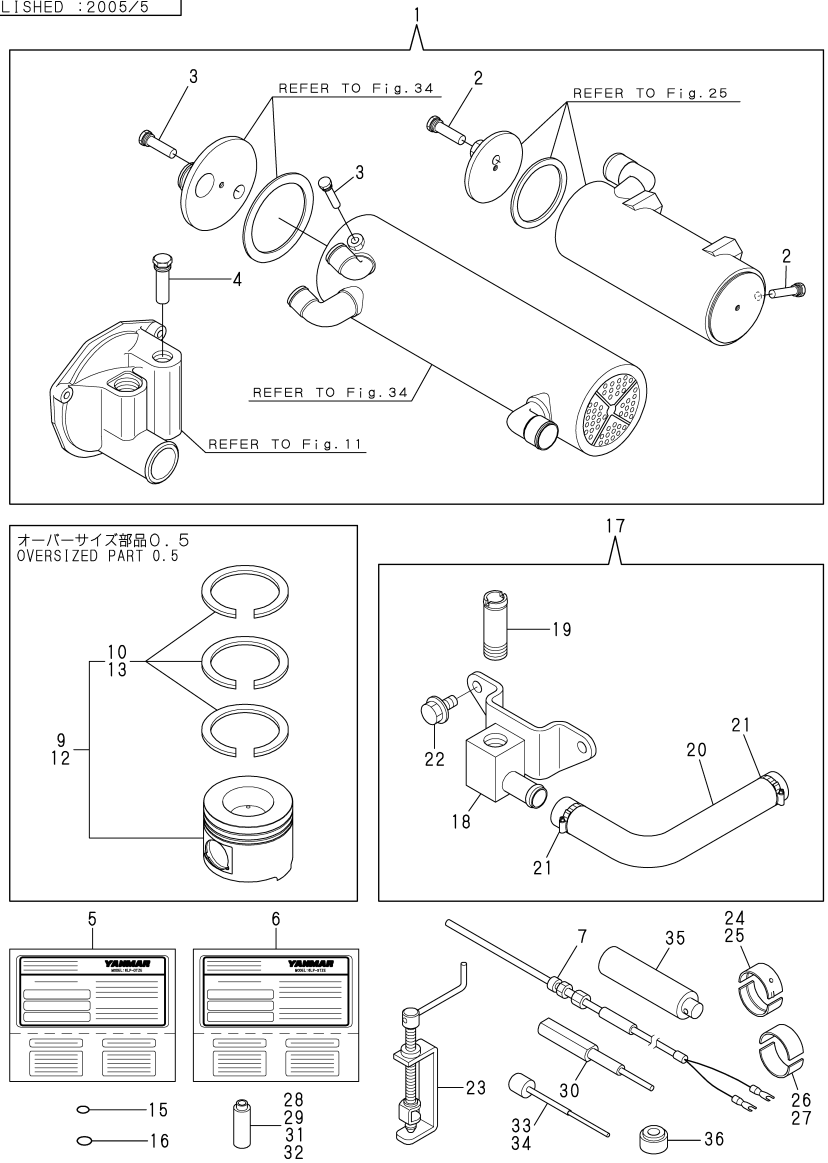

(A)=6LP(A)-DTE(P (D)=6LP(A)-STE(P
(B)=6LP(A-DTZE(P (E)=6LP(A-STZE(P
(C)=6LP(A-DTZEP1 (F)=6LP(A-STZEP1

No.	Lev.	Parts No.	Description	Q'ty (A)	(B)	(C)	(D)	(E)	(F)	I	R
1	1	119773-92600	ZINC KIT	1	1	1	1	1			
2	2	119574-44150	ZINC, ANTI-CORROSIVE	2	2	2	2	2			
3	2	119574-44150	ZINC, ANTI-CORROSIVE	2	2	2	2	2			
4	2	119574-18790	ZINC, ANTI-CORROSIVE	1	1	1	1	1			
5	1	119778-07450	LABEL, REGISTRATION	1	1	1					
6	1	119779-07450	LABEL, REGISTRATION				1	1	1		
7	1	119773-91800	THERMOCOUPLE	1	1	1	1	1	1		
8	1	119770-02020	TOOL, ADJUSTING	1	1	1	1	1	1		1
9	1	719773-22100	PISTON ASSY, O.50 OS	1	1	1					2
10	2	119770-01180	RING SET, PISTON .50	1	1	1					2
12	1	719775-22100	PISTON ASSY, O.50 OS				1	1	1		2
13	2	119770-01180	RING SET, PISTON .50				1	1	1		2
15	1	119778-26700	O-RING	1	1	1	1	1	1		
16	1	119778-26710	O-RING	1	1	1	1	1	1		
17	1	119773-49460	JOINT KIT	1	1	1	1	1	1		
18	2	119773-49400	JOINT	1	1	1	1	1	1		
19	2	119773-49420	JOINT	1	1	1	1	1	1		
20	2	119773-49440	HOSE, RUBBER	1	1	1	1	1	1		
21	2	23000-028000	CLAMP, 28	2	2	2	2	2	1		
22	2	26106-080162	BOLT, M8X 16 PLATED	2	2	2	2	2	1		
23	1	119770-02000	TOOL, VALVE REMOVER		1		1	1	1		
24	1	119770-02031	METAL, MAIN 0.25 US	1	1	1	1	1	1		3
25	1	119770-02041	METAL, MAIN 0.50 US	1	1	1	1	1	1		4
26	1	119770-02050	METAL, CRANK PIN .25	1	1	1	1	1	1		3
27	1	119770-02060	METAL, CRANK PIN .50	1	1	1	1	1	1		4
28	1	119770-02070	GUIDE, VALVE	1	1	1					
29	1	119770-02080	GUIDE, VALVE 0.05 OS	1	1	1					
30	1	119770-02090	TOOL, VALVE GUIDE	1	1	1					
31	1	119771-02010	GUIDE, VALVE				1	1	1		
32	1	119771-02020	GUIDE, VALVE 0.05 OS				1	1	1		
33	1	119771-02030	TOOL, VALVE GUIDE				1	1	1		
34	1	119771-02040	TOOL, VALVE GUIDE				1	1	1		
35	1	119771-02050	HANDLE				1	1	1		
36	1	119775-11340	SEAL, VALVE STEM				12	12	12		

Remarks
(1)NOT ILLUSTRATED.
(2)OVER SIZED(O.S.=0.50)PART 6 SET
(3)UNDER SIZED(U.S.=0.25)PART 7 SET
(4)UNDER SIZED(U.S.=0.50)PART 7 SET

N:Old $\overset{\text{Yes}}{\underset{\text{No}}{\leftrightarrow}}$ New, Q:Old $\overset{\text{No}}{\underset{\text{Yes}}{\leftrightarrow}}$ New, R:Old $\overset{\text{Yes}}{\underset{\text{Yes}}{\leftrightarrow}}$ New, S:Old $\overset{\text{No}}{\underset{\text{No}}{\leftrightarrow}}$ New, W:Add, Z:Discontinued, F:Interchangeable by set, K:Q'ty Change

Copyright (C) YANMAR CO., LTD. All RightsReserved.

Parts No. Index

Parts No.	Fig. No.	Ref. No.
104200-92350	64	3
104264-59020	63	6
104264-59030	63	7
104271-91352	59	12
	60	15
	61	18
105430-67110	62	1
114354-39600	63	3
114973-13950	10	16
119005-77350	22	5
119172-48010	10	23 -1
119172-48350	10	21 -1
119172-48410	10	22 -1
	35	19 -1
	37	20 -1
119172-48480	35	6 -1
		9 -1
		18 -1
		28 -1
	37	7 -1
		10 -1
		19 -1
		29 -1
119172-48540	35	7 -1
		11 -1
		12 -1
		23 -1
		29 -1
	37	8 -1
		12 -1
		13 -1
		24 -1
119175-13301	10	34
119175-13320	10	35
119175-13700	10	30
119175-13800	10	15
119175-33320	25	21
119175-33330	25	22
119175-33340	25	19
119175-33350	25	20
		23 -1
119175-33360	25	23
119175-33370	25	24
119175-33390	25	25
119175-42620	31	8
119175-49550	10	20
119187-49321	40	7
119574-18250	12	2
119574-18700	12	3
119574-18790	11	7

Parts No.	Fig. No.	Ref. No.
119574-18790	65	4
119574-44150	25	2
		26
	34	2
	50	2
	54	13
	65	2
		3
119574-44180	25	3
	34	4
119574-44600	34	9
119574-44621	34	10
119575-77050	51	5
119575-77060	51	6
119575-77071	51	7
119575-77510	62	5 -1
119593-18480	14	19
119593-18800	12	4
119593-18880	9	30
119593-39450	51	17
	55	8
119593-39690	29	4
119593-44560	14	15
119593-49080	10	37
	35	4
		21
	36	4
		11
		25
	37	5
		22
	38	5
		12
		27
119595-44600	14	21
119620-49290	11	23
	25	12
	34	11
119770-00010	16	2
119770-00020	16	10
119770-00030	2	28
	3	30
119770-00040	16	14
	17	12
119770-00050	16	15
119770-00060	16	16
119770-00070	16	17
	17	14
119770-00100	1	5
119770-00110	1	4

Parts No.	Fig. No.	Ref. No.
119770-00120	19	6
119770-00130	21	5
119770-00160	2	3
	3	3
119770-00181	2	14
119770-00201	2	25
	3	27
119770-00211	2	20
119770-00230	6	2
119770-00250	23	2
119770-00260	23	4
119770-00270	23	5
119770-00280	23	6
119770-00292	21	2
119770-00300	21	8
119770-00310	21	9
119770-00320	21	13
119770-00330	19	2
119770-00340	19	3
	20	3
119770-00350	21	19
119770-00360	21	20
		40
119770-00370	21	21
119770-00381	21	22
		41
119770-00390	21	23
119770-00400	21	24
119770-00410	19	33
	20	38
119770-00420	19	29
	20	34
119770-00430	19	30
	20	35
119770-00440	19	31
	20	36
119770-00461	19	35
119770-00480	19	8
119770-00490	19	9
119770-00500	19	10
119770-00510	19	27
119770-00520	19	17
119770-00530	19	18
119770-00540	19	19
119770-00550	19	20
119770-00560	19	21
119770-00570	19	22
119770-00580	19	23
119770-00590	19	24
119770-00600	19	25

Parts No.	Fig. No.	Ref. No.
119770-00610	19	26
119770-00620	6	9
119770-00630	6	10
119770-00650	24	2
119770-00660	24	3
119770-00670	26	4
	27	5
119770-00680	26	7
	27	8
119770-00692	26	8
	27	9
119770-00700	26	23
119770-00710	26	9
	27	10
119770-00720	1	16
119770-00730	32	2
119770-00740	32	3
119770-00750	32	8
119770-00760	51	2
119770-00770	51	3
119770-00781	44	16
	45	12
119770-00790	44	8
119770-00800	44	9
119770-00820	46	2
119770-00830	46	3
119770-00840	46	4
119770-00850	46	5
119770-00860	46	6
119770-00870	46	7
119770-00880	46	8
119770-00890	46	9
119770-00900	46	10
119770-00910	46	11
	47	11
119770-00920	46	12
	47	12
119770-00930	16	10 A
119770-00940	16	10 B
119770-00950	16	10 C
119770-01010	23	4 A
119770-01020	23	4 B
119770-01030	23	4 C
119770-01040	23	4 D
119770-01050	44	15
119770-01160	1	7
119770-01180	23	16
		19
	65	10
		13

Parts No. Index

Parts No.	Fig. No.	Ref. No.
119770-01190	18	2
119770-01200	6	14
119770-01210	2	5 A
	3	6 A
119770-01220	2	5 B
	3	6 B
119770-01230	16	8 A
	17	4 A
119770-01240	2	32
	3	34
119770-01250	2	33
	3	35
119770-01260	2	34
	3	36
119770-01270	2	35
119770-02000	65	23
119770-02010	23	13
119770-02020	65	8
119770-02031	21	42
	65	24
119770-02041	21	43
	65	25
119770-02050	23	20
	65	26
119770-02060	23	21
	65	27
119770-02070	16	22 -1
	65	28
119770-02080	16	23 -1
	65	29
119770-02090	65	30
119770-10050	1	1
119770-90010	16	3
119770-90020	2	21
	3	23
	16	4
119770-90030	16	5
119770-90040	16	6
119770-90050	16	7
119770-90060	16	8
119770-90070	16	11
	17	7
119770-90080	16	12
	17	9
119770-90090	2	29
	3	31
119770-90100	2	30
	3	32
119770-90110	16	18
	17	15

Parts No.	Fig. No.	Ref. No.
119770-90120	16	19
119770-90130	16	20
119770-90140	16	21
119770-90160	21	25
		31
119770-90250	2	4
	3	6
119770-90260	2	5
		22
	26	10
	27	11
119770-90270	2	8
	3	11
119770-90280	2	9
	3	12
119770-90290	2	10
	3	13
119770-90300	2	11
119770-90310	2	12
119770-90320	2	15
	3	16
119770-90330	2	16
	3	17
119770-90350	2	26
	3	28
119770-90360	2	23
119770-90370	6	3
119770-90380	6	4
		11
119770-90390	6	5
		12
119770-90400	6	6
119770-90410	6	7
119770-90430	23	12
119770-90440	21	3
119770-90450	21	10
119770-90460	21	11
119770-90470	21	14
119770-90480	21	15
119770-90490	21	16
119770-90500	21	17
119770-90510	19	4
	20	4
119770-90520	21	26
		32
119770-90530	21	27
		33
119770-90540	21	28
		34
119770-90550	21	29

Parts No.	Fig. No.	Ref. No.
119770-90550	21	35
119770-90560	19	32
	20	37
119770-90570	19	37
119770-90580	19	11
119770-90590	19	13
119770-90600	19	14
119770-90611	6	13
119770-90620	26	2
	27	2
119770-90630	15	12
	24	4
	26	11
	27	15
	32	4
		9
119770-90650	26	12
	27	16
119770-90660	26	13
	27	17
119770-90670	26	14
	27	18
	45	19
119770-90680	26	15
	27	19
119770-90690	26	16
	27	20
119770-90700	26	17
	27	21
119770-90710	26	18
	27	22
119770-90720	26	19
	27	23
119770-90730	26	20
	27	24
119770-90740	15	13
	26	21
	27	25
119770-90750	26	22
	27	26
119770-90800	32	5
119770-90810	32	6
119770-90820	31	25
119770-90860	15	14
119770-90880	51	4
119770-90890	43	26
119770-90900	43	27
119770-90910	44	11
119770-90920	44	12
119770-90930	44	13

Parts No.	Fig. No.	Ref. No.
119770-90930	45	20
	50	8
119770-90940	44	14
119770-90950	46	13
119770-90960	46	14
	47	14
119770-90990	1	6
119770-91000	1	8
119770-91010	1	9
119770-91011	1	9 -1
119770-91020	6	15
119770-91030	19	15
119770-91040	19	33 A
	20	39
119771-00012	17	2
119771-00031	17	11
119771-00041	17	13
119771-00051	20	6
119771-00060	2	2
	3	2
119771-00071	2	7
	3	8
119771-00081	3	15
119771-00101	3	22
119771-00121	20	2
119771-00131	21	36
119771-00141	21	37
119771-00151	21	23 -1
		38
119771-00160	21	39
119771-00170	19	41
	20	27
119771-00190	19	38
	20	29
119771-00200	20	30
119771-00201	20	30 -1
119771-00210	20	8
119771-00211	20	8 -1
119771-00221	20	9
119771-00230	20	10
119771-00240	20	13
119771-00250	20	17
119771-00261	20	18
119771-00271	20	19
119771-00280	20	20
119771-00290	20	21
119771-00320	1	11
119771-00330	1	13
119771-00340	45	21
119771-00350	45	8

Parts No. Index

Parts No.	Fig. No.	Ref. No.
119771-00360	45	9
119771-00370	44	10
	45	10
119771-00390	47	10
119771-00401	17	6
119771-00411	17	6 A
119771-00421	17	6 B
119771-00430	19	40
	20	28
119771-00440	18	7
119771-01270	3	37
119771-02010	17	18 -1
	65	31
119771-02020	17	19 -1
	65	32
119771-02030	65	33
119771-02040	65	34
119771-02050	65	35
119771-10040	1	2
119771-90050	17	4
119771-90060	17	3
119771-90070	17	8
119771-90080	17	16
119771-90110	3	4
119771-90120	3	5
		24
119771-90130	3	9
119771-90140	3	10
119771-90160	3	25
119771-90170	19	39
	20	31
119771-90180	19	36
	20	32
119771-90190	20	11
119771-90200	20	14
119771-90210	20	15
119771-90230	20	23
119771-90240	20	24
119771-90250	20	25
119771-90260	27	13 -1
119771-90270	27	13
119771-90290	45	13
119771-90300	45	14
119771-90310	45	15
119771-90320	45	16
119771-90330	45	17
119771-90340	47	13
119773-01580	2	37
	3	39
119773-01590	2	38

Parts No.	Fig. No.	Ref. No.
119773-01590	3	20
119773-01600	4	1
119773-01651	4	5
119773-01671	4	6
119773-03011	8	1
119773-03012	8	1 -1
119773-03021	8	2
119773-03022	8	2 -1
119773-03031	8	3
119773-03032	8	3 -1
119773-03150	8	5
119773-03190	8	6
119773-03191	8	6 -1
119773-03200	8	7
119773-03251	8	9
119773-03271	8	10
119773-03301	8	8
119773-07210	18	3
119773-07251	7	10
119773-07280	7	3
119773-07350	7	5
119773-07510	7	20
119773-08101	5	1
119773-08111	5	2
119773-08200	5	3
119773-08250	56	1
119773-08300	5	8
119773-08310	5	12
119773-08330	5	9
		13
119773-08340	5	10
		14
119773-08350	5	11
		15
119773-12100	15	2
119773-12150	15	5
119773-13010	14	10
119773-13100	14	1
119773-13160	14	3
119773-13200	14	4
119773-13250	10	1
		10
		25
119773-13300	10	2
		11
		27
119773-13500	10	12
119773-18010	9	1
119773-18100	11	1
119773-18121	11	22

Parts No.	Fig. No.	Ref. No.
119773-18160	11	11
119773-18181	11	12
119773-18210	12	1
119773-18250	9	28
119773-18320	11	5
119773-18330	11	4
119773-18340	11	3
119773-18350	11	6
119773-18360	11	10
119773-18500	63	8
119773-18700	9	35
119773-18850	9	29
119773-21500	22	4
119773-22010	23	8
119773-28010	22	1
119773-28500	22	2
119773-28600	22	3
119773-33050	25	7
119773-33060	25	6
119773-33070	25	4
119773-33080	25	5
119773-34400	6	28
119773-34501	6	22
119773-34600	6	23
119773-34621	6	24
119773-34770	6	25
119773-34810	6	16
119773-34821	6	29
119773-34950	6	30
119773-39610	29	2
119773-39671	29	3
119773-39801	63	5
119773-39820	29	5
119773-42500	31	1
119773-42520	31	21
119773-42550	31	4
119773-42570	31	6
119773-42600	31	7
119773-42650	31	2
119773-43350	32	12
119773-44010	34	1
119773-44050	34	3
119773-44060	34	7
119773-44070	34	5
119773-44080	34	6
119773-44150	34	8
119773-44450	39	1
119773-44500	14	20
119773-49020	35	27
119773-49030	35	26

Parts No.	Fig. No.	Ref. No.
119773-49030	37	28
119773-49090	35	17
	37	18
119773-49110	39	2
119773-49140	39	4
119773-49150	39	5
119773-49200	39	7 A
119773-49250	40	1
119773-49280	40	3
119773-49300	40	9
119773-49320	40	10
119773-49340	40	4
119773-49360	35	13
	37	14
119773-49370	35	14
	37	15
119773-49400	65	18
119773-49420	65	19
119773-49440	65	20
119773-49460	65	17
119773-49540	33	1
119773-49550	33	2
119773-49570	33	3
119773-49990	40	8
119773-51810	43	21
119773-51910	43	3
		13
119773-51920	43	4
		14
119773-51930	43	5
		15
119773-51940	43	6
		16
119773-51950	43	7
119773-51960	43	8
		18
119773-51970	43	9
		19
119773-51980	43	10
		20
119773-51990	43	1
119773-53901	44	2
119773-53920	44	6
119773-55500	49	1
119773-55601	49	11
119773-55602	49	11 -1
119773-55620	49	12
119773-55700	49	1 -1
119773-55710	49	3 -1
119773-55750	50	1

Parts No. Index

Parts No.	Fig. No.	Ref. No.
119773-55750	54	12
119773-55760	50	3
	54	14
119773-55770	50	9
119773-55830	50	15
119773-55870	50	10
	54	15
119773-55890	50	11
	54	16
119773-59101	48	1
119773-59123	50	4
119773-59500	44	18
119773-59511	44	19
119773-67101	52	2
119773-67150	52	3
119773-67220	52	4
119773-77010	57	1
119773-77030	57	49
119773-77200	58	1
119773-77251	58	30
119773-77320	58	31
119773-77340	53	5
	58	32
119773-77350	58	33
119773-77551	62	2
119773-77570	62	3
119773-77850	51	8
119773-77860	51	9
119773-85500	56	4 A
119773-85520	56	4
119773-85550	56	2
119773-91011	63	9
119773-91021	63	10
119773-91040	63	11
119773-91050	63	2
119773-91131	59	1
119773-91141	59	33
119773-91162	60	1
119773-91171	60	38
119773-91192	61	1
119773-91200	59	2
	60	2
	61	2
119773-91221	61	43
119773-91231	60	9
	61	9
119773-91240	59	6
119773-91261	59	5
119773-91281	60	8
	61	8

Parts No.	Fig. No.	Ref. No.
119773-91301	62	15
119773-91380	62	17
119773-91400	62	8
119773-91420	62	18
119773-91501	62	19
119773-91600	62	27
119773-91650	62	28
119773-91700	62	29
119773-91800	65	7
119773-91850	62	9
		24
119773-92600	65	1
119775-03150	8	14
119775-07251	7	11
119775-07280	7	19
119775-07510	7	20 A
119775-08210	5	4
119775-08220	5	7
119775-08230	5	16
119775-11340	20	40
	65	36
119775-12101	15	7
119775-12150	15	10
119775-18010	9	2
119775-22012	23	10
119775-33000	25	1
		15
119775-33060	25	17
119775-33070	25	18
119775-33100	25	16
119775-33151	25	8
119775-33170	25	9
119775-33200	25	10
119775-33650	25	11
119775-35060	27	30
119775-35080	27	28
119775-39121	28	1
119775-39141	28	2
119775-48640	35	5
	36	1
	37	4
	38	1
119775-49010	35	1
	36	2
	37	1
	38	2
119775-49020	37	27
119775-49030	35	15
119775-49040	35	2
	36	26

Parts No.	Fig. No.	Ref. No.
119775-49040	37	3
	38	26
119775-49060	37	2
	38	3
119775-49080	35	16
	37	17
119775-49090	37	16
119775-49120	39	3
119775-49150	39	6
119775-49160	35	10
	36	15
	37	11
	38	16
119775-49200	39	7
119775-49220	39	8
119775-49260	40	2
119775-49750	35	8
	37	9
119775-51950	43	17
119775-51990	43	11
119775-53901	45	2
119775-53920	45	6
119775-55600	49	11 -2
119775-59500	45	24
119775-59510	45	25
119775-59520	45	23
119775-59540	45	26
119775-59551	45	27
119775-59560	45	28
119775-59803	47	3
119775-59813	47	4
119775-59823	47	5
119775-59833	47	6
119775-59843	47	7
119775-59853	47	8
119775-77650	51	15
119778-01600	4	2
119778-07400	7	17
119778-07420	7	17 A
119778-07450	7	17 B
	65	5
119778-07500	7	9
119778-08300	4	3
119778-08350	4	4
119778-08501	5	18
119778-13300	10	3
119778-13310	10	4
119778-13330	10	6
119778-13370	10	7
119778-13550	10	28

Parts No.	Fig. No.	Ref. No.
119778-13640	10	14
119778-21500	22	6
119778-26500	53	1
119778-26511	49	17 -2
119778-26550	53	3
119778-26600	55	1
119778-26610	55	2
119778-26620	54	1
119778-26650	55	3
119778-26660	55	4
119778-26670	48	8
	55	12
119778-26700	55	5
	65	15
119778-26710	55	6
	65	16
119778-26750	54	2
119778-26800	55	7
119778-48620	10	36
	36	27
	38	25
119778-49040	10	42
119778-49070	10	17
119778-49080	10	18
119778-49200	10	19
	36	17
	38	18
119778-49780	35	22
	36	12
	37	23
	38	13
119778-49800	10	39
	35	24
	36	21
	37	25
	38	22
119778-67200	14	31
119778-77812	62	4
119778-85500	56	6
119778-91500	62	26
119779-07400	7	18
119779-07420	7	18 A
119779-07450	7	18 B
	65	6
119779-48620	10	36 -1
119779-49040	10	42 -1
	36	24
	38	28
119779-49050	36	3
	38	4

Parts No. Index

Parts No.	Fig. No.	Ref. No.
119779-49090	36	5
	38	6
119779-49100	36	6
	38	7
119779-49150	36	14
	38	15
119779-49170	36	16
	38	17
119779-49570	36	7
119779-49590	38	8
119787-26100	53	13
119787-26512	49	17
119787-26513	49	17 -1
119787-26520	54	7
119787-26540	53	2
119787-26550	55	10
119787-26561	55	11
119787-42550	31	14
119787-42570	31	3
		15
119787-49300	53	4
119793-08101	5	19
119793-08111	5	20
120130-59080	13	2
120147-91760	61	14
120324-07240	7	1
120445-44640	14	7
		22
121236-77340	58	29
121250-49110	50	12
	54	3
121252-39150	29	1
121575-91250	59	10
	60	13
	61	16
121750-59890	48	7
	62	30
121855-59880	48	2
122210-92600	64	4
123482-39670	63	4
123482-91291	59	11
	60	14
	61	17
123658-18910	9	32
123682-07851	7	7
124060-39452	62	12
124070-77950	62	7
124413-39100	30	1
124616-91370	51	10
124617-91980	59	4

Parts No.	Fig. No.	Ref. No.
124617-91980	59	37
	60	4
		42
	61	4
		47
124617-91990	59	34
	60	39
	61	44
124770-77940	62	6
124790-44560	14	16
127487-18970	13	1
127610-03150	54	18
127610-03270	10	13
127610-91221	62	14
127610-91350	62	16
127616-11960	14	18
	63	1
127620-91250	61	11
127687-18910	12	5
127687-91870	59	7
	60	41
	61	46
127687-91880	59	36
	60	40
	61	45
127688-77340	52	14
127692-91410	59	30
	60	35
	61	40
127692-91440	59	31
	60	36
	61	41
127692-91450	59	32
	60	37
	61	42
128170-13600	10	29
128170-86500	52	12
128170-86501	52	12 -1
128170-91160	62	13
128296-07190	7	12
128296-07260	7	2
128296-07300	7	4
128296-07360	7	6
128296-07400	7	13
128296-07420	7	14
128296-07450	7	15
128296-07460	7	16
128391-91440	59	23
128391-91640	59	22
128391-91700	59	35

Parts No.	Fig. No.	Ref. No.
128391-91740	59	24
128391-91930	59	18
129107-44590	14	6
129170-91610	59	25
	60	30
	61	34
129170-91650	59	8
	60	11
129170-91800	59	13
	60	16
	61	19
129170-91810	59	17
	60	10
	61	7
129170-91890	60	19
129170-91930	60	20
129171-44600	14	5
129470-91190	59	16
	60	7
	61	23
129490-77910	62	5
129574-77710	62	39 A
129574-77720	62	39
129574-77980	62	23
129574-91210	60	5
	61	5
129574-91221	60	6
	61	6
129574-91240	61	10
129574-91311	61	49
129574-91410	59	9
	60	12
	61	15
129574-91420	59	20
	60	22
	61	26
129574-91430	60	25
	61	29
129574-91440	60	28
	61	32
129574-91490	61	12
129574-91561	62	21
129574-91570	62	22
129574-91600	61	38
129574-91620	59	19
	60	21
	61	25
129574-91630	60	24
	61	28
129574-91640	60	27

Parts No.	Fig. No.	Ref. No.
129574-91640	61	31
129574-91650	59	29
	60	34
	61	39
129574-91710	59	26
	60	31
	61	35
129574-91720	59	21
	60	23
	61	27
129574-91730	60	26
	61	30
129574-91740	60	29
	61	33
129574-91750	59	27
	60	32
	61	36
129574-91760	59	38
	60	43
	61	48
129574-91770	59	28
	60	33
	61	37
129574-91780	59	14
	60	17
	61	20
129574-91790	59	15
	60	18
	61	21
129574-91870	59	3
	60	3
	61	3
129574-91880	61	13
129574-91890	61	22
129574-91930	61	24
129670-42520	31	5
144626-91570	62	20
148633-92350	64	5
160870-78700	52	15
177040-09050	64	1
183350-55130	62	40
189010-92020	64	2
194250-51660	55	9
		13
196346-34860	54	8
196630-12980	7	8
22117-080000	10	41
	11	19
	14	32
	35	3

Parts No. Index

Parts No.	Fig. No.	Ref. No.
22117-080000	36	23
	37	6
	38	24
22117-100000	2	36
	3	38
	9	38
	14	8
	25	14
	31	22
	62	31
22117-120000	4	7
	6	17
	29	6
	34	14
	43	28
	57	50
	58	39
	63	21
22117-140000	31	9
22137-080000	10	31
	63	18
22137-100000	53	6
22190-120002	48	3
22190-120006	6	21
22190-140002	48	4
		5
	50	13
22190-270002	62	25
22213-080000	31	18
	58	40
22217-050000	52	17
22217-100000	2	17
	3	18
	31	23
	62	32
22217-120000	57	52
22522-050160	31	10
23000-013000	13	3
	14	23
23000-016000	8	11
	44	20
	45	29
	54	5
	55	14
23000-019000	50	5
23000-022000	40	5
23000-025000	55	15
23000-028000	8	12
	29	7
	65	21

Parts No.	Fig. No.	Ref. No.
23000-035000	10	21
23000-041000	10	22
	35	19
	36	18
	37	20
	38	19
23000-048000	35	18
	37	19
23000-054000	10	38
	35	6
		9
		11
		23
		28
	36	8
		13
		19
	37	7
		10
		12
		24
		29
	38	9
		14
		20
	39	9
23000-060000	35	7
		12
		29
	36	9
		20
	37	8
		13
	38	10
		21
23000-127000	10	23
23010-013000	14	17
23297-060081	14	24
23297-350121	35	20
	37	21
23414-080000	13	4
	63	13
23414-080012	9	36
	14	25
	15	15
		19
23414-100000	9	34
	29	8
23414-100014	63	15
23414-120000	29	9

Parts No.	Fig. No.	Ref. No.
23414-120000	63	16
23414-120016	6	18
23414-140018	54	17
23414-180000	15	20
23414-200000	15	16
		21
	51	11
23851-060000	63	17
23857-030000	9	37
	14	26
23857-060000	29	10
23857-080000	48	6
23871-030000	39	18
23876-030000	39	17
23887-100002	63	19
23887-180002	15	22
23887-200002	15	8
		17
23893-010002	9	33
24311-000200	28	3
24321-000350	39	10
24321-000650	31	11
24341-000100	6	26
24351-010110	53	14
26014-060122	51	13
26022-050162	52	1
26106-060122	8	4
	62	10
26106-060162	62	33
26106-060202	51	12
	62	10 -1
26106-060252	54	9
26106-080122	10	8
		32
	14	27
	40	6
26106-080142	6	19
	8	13
26106-080162	10	9
		33
	14	9
	15	9
		18
	39	11
	50	6
	54	4
	62	11
	65	22
26106-080182	49	13
		18

Parts No.	Fig. No.	Ref. No.
26106-080182	53	7
26106-080202	28	4
	33	4
	39	12
	50	14
	51	16
	54	6
26106-080222	14	12
26106-080252	11	20
	54	10
26106-080302	50	16
	52	9
		16
26106-080352	58	34
26106-080402	49	14
26106-080502	39	13
26106-080552	58	38
26106-080602	14	28
26106-100182	18	4
	56	8
26106-100202	56	7
26106-100222	29	11
26106-100302	5	5
	56	3
26106-100502	25	13
	62	36
26106-100802	36	10
	38	11
26106-100952	58	35
26106-101102	5	6
26106-120202	43	22
26106-120252	43	23
26116-081652	11	21
26116-120452	57	51
26136-100252	11	13
	34	12
	39	14
	53	8
		9
	56	5 A
26136-100302	53	10
	56	5
26136-100352	5	17
26136-100602	53	12
	58	36
26156-100202	18	5
26156-120202	6	20
	29	12
	63	20
26156-120302	34	13

Parts No. Index

Parts No.	Fig. No.	Ref. No.
26156-120352	4	8
26156-120402	4	9
	58	37
26156-120502	4	10
26203-080602	31	17
26203-080702	31	16
26213-100252	9	39
26223-100252	14	11
26226-080602	11	14
26226-080652	11	15
		17
26226-080752	11	18
26306-080002	10	24
		26
	11	16
	50	7
	54	19
26306-100002	62	37
26366-060002	62	38
26376-100002	2	18
	3	19
26376-120002	53	11
26703-100002	9	31
26706-100002	9	40
26716-060002	54	11
	62	34
26716-080002	6	27
	10	40
	35	25
	36	22
	37	26
	38	23
	49	15
	63	12
26716-100002	62	35
26716-120002	43	24
26736-100002	31	12
26736-140002	31	13
26756-080002	49	16
	63	14
27241-250000	15	4
28110-100130	64	6
28110-120140	64	7
28110-170190	64	8
28110-220240	64	9
28120-002000	64	10
29622-250001	51	14
41710-000410	52	10
41710-001300	52	11
41730-000681	52	13

Parts No.	Fig. No.	Ref. No.
43530-500610	31	19
43662-030030	31	20
43720-001220	30	2
719773-22100	23	14
	65	9
719775-22100	23	17
	65	12
720445-44201	14	13
977780-01200	42	1
977780-01210	41	1
977780-01230	41	2
	42	2
977780-01240	42	3
977780-01250	41	3
977780-03000	41	9
	42	9
X0044021509	41	7
	42	7
X0210416680	58	2
X0212005000	58	9
X0214006030	58	4
X0214110570	58	6
X0215016550	58	13
X0215060070	58	11
X0215420160	58	12
X0215512260	58	22
X0215804510	58	14
X0216025230	58	28
X0216051970	58	17
X0216052070	58	23
X0216202720	58	15
X0216260190	58	18
X0216260250	58	19
X0280210250	57	11
X0280625790	57	26
X0280630030	57	28
X0280650250	57	16
X0281003001	57	2
X0282001780	57	3
X0283005381	57	7
X0283060070	57	27
X0283270160	57	10
X0283270171	57	24
X0283711500	57	23
X0283716640	57	14
X0283810071	57	13
X0285017860	57	22
X0285100500	57	21
X0534040240	57	18
X0534497181	57	44

Parts No.	Fig. No.	Ref. No.
X0534497510	57	45
X0535050290	57	17
X0535117630	57	41
X0535137770	57	46
X0536600443	57	20
X0536807770	57	48
X0719005370	49	5
X0719240010	49	7
X0860620180	49	10
X0861001400	49	2
X0862202820	49	8
X0931006600	44	3
X0931006610	45	3
X0931330290	44	5
X0932490090	45	5
X0934006770	44	4
X0934006780	45	4
X1260001940	58	16
X1280995160	57	6
X1280995610	57	40
X1284018620	57	37
X1534002321	57	15
X179100011X	42	5
X179100021X	41	5
X179100100X	41	6
	42	6
X199903800X	41	8
	42	8
X211810030	11	8
X214320104	11	9
X5186100664	49	3
X8636008003	41	4
	42	4
X9017010061	57	29
X9025810001	57	47
X9080210070	49	6
X9080240360	49	4
X9147005121	49	9
X9490065080	57	36
X9490065460	58	20
X9490065590	58	7
X9490066401	58	27
X9490075110	58	21
X9490076280	58	26
X9490076530	57	33
X9490076850	57	39
X9490119320	57	43
X9490200600	57	25
X9490423741	57	31
X9490432000	58	8

Parts No.	Fig. No.	Ref. No.
X9490441912	57	32
X9490474440	57	19
X9490505650	57	42
X9490562481	58	24
X9490562520	58	3
X9490563080	58	25
X9490564480	57	30
X9490721120	57	12
X9490721130	57	9
X9491001750	57	5
X9491001930	57	4
X9491002790	58	10
X9491004370	58	5
X9491200240	57	35
X9491704030	57	8
X9491704040	57	38
X9491704070	57	34
XJD532012	9	25
XNH261604	9	7
XNH261605	9	6
XNH361206	9	3
XNH361400	9	4
XNH361401	9	5
XNH362112	9	10
XNH362709	9	19
XNH362802	9	21
XNH362803	9	22
XNH362804	9	14
XNH362809	9	18
		27 B
XNH362810	9	20
XNH363001	9	11
XNH363051	9	12
XNH364405	9	13
XNH364606	9	9
XNH365303	9	17
XNH365311	9	27 A
XNH365418	9	16 A
XNH365419	9	15 A
XNH369101	9	16
XNH369807	9	15
XNH961180	9	23
XNH961260	9	24
XNH978931	9	26
XNN171110	9	8
XNN976562	9	27